Elite® Panel Installation Manual

Fire
AC Power On
Pre-Alarm
Fire Output Active
On Test
Panel Sounder Silenced
Delay Active
More Events
Point Bypassed
Fire Events
Exit
Enter
More Events
General Trouble
Power Trouble
System Trouble
NAC Trouble
Supervisory Alarm
Re-Sound Alarm
Alarm Silence
Panel Sounder Silence
Lamp Test
Reset
Fire Drill
Programmable Function
Enable Access
Elite
Fire Alarm Control

VES, LLC
Elite Panel Installation Manual
A-Series

VF3514-00, Revision E02.06
Issue Date: 10/19/2009

Underwriters Laboratories (UL)

File number (S 8485)

Fire Alarm Equipment

VES, LCC

NFPA

Install in accordance with NFPA 13 and NFPA 72. The VES Elite A Panel is suitable as follows:

- Local Signaling Unit
- Releasing for Elite Panels only. Non-Releasing for Elite Panels.
- Types of signaling services are automatic fire alarm, manual fire alarm, waterflow alarm and sprinkler supervisory.
- Style 4, 6 or 7 for Signaling Line Circuits
- Style Y for Notification Appliance Circuits
- Non-coded Signaling, DACT requires Integrated Dialer
- Remote Station (RS) Protected Premises Unit (PPU) provides releasing, non-releasing and VESNet communication on models (VFXX24, VFXX44, VFXX04) containing the Modem-DACT Ethernet (VFYY04, VFYY05, VFYY08, VFYY09), integrated Dialer or on models (VFXX21, VFXX41, VFXX01) containing the Media Gateway
- Central Station (CS) Protected Premises Unit (PPU) provides releasing, non-releasing and VESNet communication on models (VFXX24, VFXX44, VFXX04) containing the Modem-DACT Ethernet (VFYY04, VFYY05, VFYY08, VFYY09), Integrated Dialer or on models (VFXX21, VFXX41, VFXX01) containing the Media Gateway
- Models (VFXX22, VFXX42, VFXX02) containing the NIC, must be connected (networked) to the VESNet with models (VFXX21, VFXX41, VFXX01) containing the Media Gateway to communicate to a Remote Station Protected Premises Unit, Proprietary Protected Premises Unit or Central Station Protected Premises Unit. The VESNet LCD Display (VF8300) with or without the LED ADD-ON Annunciator (VF8203) may also be connected to the VESNet (networked) with the above models
- Proprietary (P) Protected Premises Unit (PPU) provides releasing, non-releasing and VESNet communication on models (VFXX24, VFXX44,VFXX04) containing the Modem-DACT Ethernet, (VFYY04, VFYY05, VFYY08, VFYY09) Integrated Dialer or on models (VFXX21, VFXX41, VFXX01) containing the Media Gateway
- Remote Station (RS) Protected Premises Unit (PPU) provides releasing, non-releasing and eNet communication on models (VFXX24, VFXX44, VFXX04) containing the Modem-DACT Ethernet on models (VFYY04, VFYY05, VFYY08, VFYY09) containing the integrated Dialer
- Central Station (CS) Protected Premises Unit (PPU) provides releasing, non-releasing and eNet communication on models (VFXX24, VFXX44, VFXX04) containing the Modem-DACT Ethernet on models (VFYY04, VFYY05, VFYY08, VFYY09) containing the Integrated Dialer
- Proprietary (P) Protected Premises Unit (PPU) provides releasing, non-releasing and eNet communication on models (VFXX24, VFXX44,VFXX04) containing the Modem-DACT Ethernet on models (VFYY04, VFYY05, VFYY08, VFYY09) containing the Integrated Dialer

“XX” shown in the model numbering above denotes control panel type where “XX” is “09” for Elite Panels and “08” for Elite Panels.

“YY” shown in the model numbering above denotes control panel type where “YY” is “04” for H-Series Elite Panels, “05” for A-Series Elite Panels, “08” for H-Series Elite Panels and “09” for A-Series Elite Panels.

FM Global Technologies LLC (FM APPROVALS)

VES, LCC

FCC Compliance

This equipment has been tested and found to comply with the limits for a Class A digital device, pursuant to Part 15 of the FCC Rules. These limits are designed to provide reasonable protection against harmful interference when the equipment is operated in a commercial environment. This equipment generates, uses, and can radiate radio frequency energy and, if not installed and used in accordance with the Installation Manual, may cause harmful interference to radio communications. Operation of this equipment in a residential area is likely to cause harmful interference in which case the user will be required to correct the interference at his own expense. Any changes or modifications not expressly approved by VES, LCC could void the user's authority to operate this equipment under the rules and regulations of the FCC.

Operation is subject to the following two conditions:

(1) This device may not cause harmful interference, and

(2) This device must accept any interference received, including interference that may cause undesired operation.

ACTA telephone compliance (Part 68 of the FCC Rules):

Facility Interface Code (FIC)02LS2
Service Order Code (SOC)9.0Y
Labeling (certification) number US:VESAL00BVF10xx-xx
Universal Service Order Code (USOC)RJ 31X

TIA/EIA TSB-129-A

Alarm Dialing Equipment (8.2.14)

Alarm dialing equipment (equipment code GAL”), including dialers associated with fire and intrusion protection systems, medical alert systems, equipment failure notification systems, etc., must be connected to a properly installed RJ3IX or RJ38X jack to ensure the ability to seize the telephone line in emergency situations. It is a requirement that the customer information accompanying such equipment include the following statement and diagram (where RJ38X may be used in place of RJ31X, if appropriate, and the name and/or model number of the equipment may be substituted for the term “alarm dialing equipment” in the text and figure):

Alarm dialing equipment must be able to seize the telephone line and place a call in an emergency situation. It must be able to do this even if other equipment (telephone, answering system, computer modem, etc.) already has the telephone line in use. To do so, alarm dialing equipment must be connected to a properly installed RJ31X jack that is electrically in series with and ahead of all other equipment attached to the same telephone line.
If you have any questions concerning these instructions, you should consult your telephone company or a qualified installer about installing the RJ31X jack and alarm dialing equipment for you.

Copyright © 2009 by VES, LLC
All rights reserved

VES is a registered trademark of VES, LLC.
All other product or service names are the property of their respective owners.

VES, LLC
Elite Installation Manual
A-Series

VF3514-00, Revision E02.06

Contents

Section 1
Introduction

Using This Manual 3
Related Documentation 3
Document Conventions 4
  Part Numbers 4
  Writing styles 4
If You Need Help 4
Contacting VES Tech Support 4
  RMA Returns Required 4
  Warranty Returns 5
  Advanced Replacements 5
  Suspect-Product Testing 5
Product Return Address 5

Section 2
Overview

Points and Addresses 6
Contact ID Address Restrictions 6
Hardware Features 7
Panel Controls and Indicators 8
  Controls 9
  Indicators 11
Device Connections 12
  Terminal Strip X1 13
  Terminal Strip X2 13
  4 Amp OEM 1 Power Supply 14

Section 3
Installation

General Installation Checklist 16
Before You Begin 16
Determining System Current Draw 18
  Standby-Battery Capacity 18
  Operating Constraints 18
Wiring the 4 Amp OEM 1 Power Supply 19
  Connecting Standby-Batteries 20
  Connecting 24VDC Devices 20

Contents

Connecting Class A Loops **21**
NFPA 72, Style 7 22
NFPA 72, Style 6 23
Connecting Class B Loops **24**
Installing SLC Devices **24**
Detector Spacing 24
Addressable Notification Appliances and Output Modules **25**
Silencing Notification Appliances 26
Connecting NAC Devices **26**
Connecting Output Devices **27**
Fire Routing and Trouble Routing 27
Programmable Output 28
Auxiliary 24 VDC **28**
Relay Contacts 29
Connecting Remote Control And Aux. Inputs **30**
Mounting the Elite Panel **31**
Marking the Location 31
Preparing for Mounting 32
Anchoring the Elite Panel 36
Wiring AC Power and TELCO 36
Testing the Installation **38**
Confirming a Successful Installation 39
Testing the Panel Lamps 40
Trouble-Silence Test 41
Troubleshooting **43**
4 Amp OEM 1 Power Supply 43
Front-Panel Menu 44

Contents

Section 4

Front-Panel Menu

Access Level 2 54

Disablements 55

View Devices 57

Test Zones 58

Set System Time 58

Sensor Maintenance Early Warning 59

Events and Status 59

Access Level 3 60

Front-Panel Controls 60

Section 5

Maintenance and Repair

Maintenance 62

Inspecting Batteries 62

Replacing Standby-Batteries 62

Replacing Fuses 64

10 Amp Battery Fuse 64

3 Amp Power-Supply Fuse 65

Replacing Internal Components 67

Replacing Cabinet Components 68

Contents

Appendix A

Specifications

Electrical 70

Standby and Alarm Current 70

Earth Fault Indication 70

SLC Ratings 70

Programmable Relay Contact Ratings 71

Programmable Special Application NAC Outputs 71

Power Output Circuits 72

Unsupervised Inputs 72

RS485 Serial Bus 72

Auxiliary 24 VDC 73

eNET Terminals 73

4 Amp OEM 1 Power Supply 73

AC Line Connection 74

Cabling 74

Operating Environment 75

Physical Specifications 75

VES Elite Panels 76

Appendix B

Equipment List

Loop Devices and Accessories 77

Replacement Parts 78

Compatible Notification Appliance Circuits 80

Authorized Special Application Devices 94

Compatible Devices for Auxiliary 24V 94

Contents

Appendix C
Calculations

Current-Loading 96
Determining the Standby-Battery Rating 98
  Battery Rating Equation 98
  Devices 99
  NAC Devices 100
  Auxiliary Devices 100
  Tabulating Data 101
NAC Wiring Length 102
  Sample Lmax Calculation 102

Appendix D
Door Label

Appendix E
Operating Instructions

Glossary

Contents

This page intentionally left blank.

Section 1

Introduction

Notice to Users, Installers, Authorities Having Jurisdiction, and other involved parties. This product incorporates field-programmable software. In order for the product to comply with the requirements in the Standard for Control Units and Accessories for Fire Alarm Systems, UL 864 9th Edition, certain programming features or options must be limited to specific values or not used at all as indicated below.

Program Feature or Option	Permitted in UL 864 ? (Y / N)	Possible Settings	Settings Permitted In UL 864
AC Fail Delay	Yes	0 - 24 hours	1 - 3 hours
Alarm Verification	Yes	5 - 60 seconds	60 second
Disable Buzzer	Yes	Enable / Disable	Enable
Disable Ground Trouble	Yes	Enable / Disable	Enable
Set Buzzer Silence Access Level	Yes	1 or 2	2
NAC Output Delay Stage 1	No	0 - 5 minutes	0 minutes
NAC Output Delay Stage 2	No	0 - 5 minutes	0 minutes
Photoelectric Smoke Sensor Delay	Yes	0 -120 seconds	0 seconds
Ionization Smoke Sensor Delay	Yes	0 -120 seconds	0 seconds
Duct Detector	Yes	0 -120 seconds	0 seconds
Duct Detector with Relay	Yes	0 -120 seconds, 0 - 5 seconds	0 seconds
Contact Module Delay (All models)	Yes	0 -120 seconds	0 seconds
Relay Module Delay	Yes	0 - 5 seconds	0 seconds
Supervised Output Module Delay	Yes	0 - 5 seconds	0 seconds

Reference Appendix B, “Equipment List” for model designations of the devices contained in this table.

This manual describes 2 loop and 4 loop models of the VES A-Series Elite Panel. Two loop models include the No Communication VF1460, the Media Gateway VF1461, the Network Interface Card (NIC) VF1462, the the Modem-DACT Ethernet VF1464 and the eNet Interface VF1465. Four loop models include the No Communication with Loop Expansion VF1480, the Media Gateway with Loop Expansion VF1481, the Network Interface Card (NIC) with Loop Expansion VF1482, VF1483, the Modem-DACT Ethernet with Loop Expansion VF1484 and the eNet Interface VF1485.

Updates are frequently published between document revisions. Obtain these updates by visiting the "downloads" portion of the VES eSP website. The eSP website is exclusive to customers of VES, LLC.
Non-customers will not have access to the eSP website.
To review documentation updates for this publication and others:

1. Type www.ves-esp.com in the blank address field of Internet Explorer.
2. Type a user name and password on the eSP window and then click Submit.
3. Click Downloads under ESP LINKS on the eSP Welcome window.
4. Select Documentation Updates from the drop-down-window and then click go.

A list of Documentation Updates will be displayed.

This section describes:

- Using This Manual
- Related Documentation
- Document Conventions
- If You Need Help
- Contacting VES For Repair

The figure below illustrates the Elite Panel:

Figure 1-1
Elite Panel

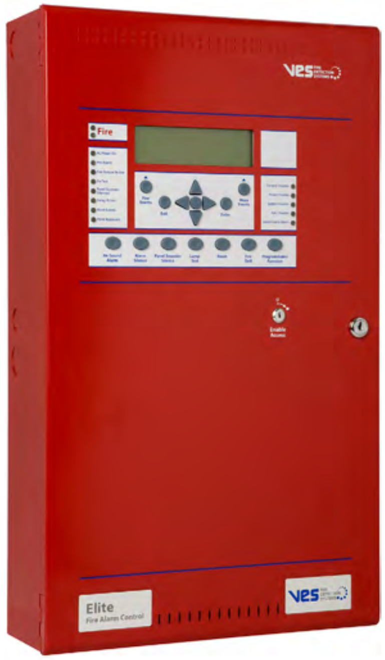

Using This Manual

The following sections provide instructions for installing, testing and troubleshooting the Elite Panel:

Section 1	**Introduction** provides document conventions, the technical help-line, repair and return information.
Section 2	**Overview** provides a summary features of the Elite Panel.
Section 3	**Installation** describes how to setup, install and test the Elite Panel.
Section 4	**Front-Panel Menu** describes how to operate the Elite Panel from its front-panel.
Section 5	**Maintenance and Repair** describes how to perform routine service and repair on the Elite Panel.
Appendix A	**Specifications** provides characteristics of the Elite Panel.
Appendix B	**Equipment List** provides model numbers for VES Elite Panels, loop devices, accessories, replacement parts and compatible Notification Appliances.
Appendix C	**Current Draw Worksheet** provides an example for recording and calculating the current draw of the Elite Panel and its Signaling Line Circuits, Initiation Devices and Notification Appliances.
Appendix D	**Front Door Label** is a copy of the Elite Panel front door label.
Appendix E	**Operating Instructions** provides an overview of Elite Panel status and control instructions.
Glossary	**Glossary** contains definitions for terminology used in the Elite Panel Installation Manual.

Related Documentation

The following documents shall be used to provide additional information for installing the Elite Panel:

- 16 Channel I/O Interface Installation Manual, VF3512-00, E01.XX
- eView Installation Manual, VF3510-00, E01.XX
- eMatrix Installation Manual, VF3513-00, E01.XX
- eNet Installation Manual, VF3511-00, E01.XX
- Media Gateway Installation Manual With Releasing VF1627-00, Rev. E02.XX
- Network Interface Card (NIC) Installation Manual With Releasing VF1629-00, Rev. E02.XX
- Modem-DACT Ethernet Installation Manual With Releasing VF1628-00, Rev. E02.XX

Document Conventions

This document contains conventions for part numbers and writing style.

Part Numbers

Part numbers are provided in Section 1, Appendix B and Appendix D of this manual. Refer to Appendix D, Door Label for diagram summary of information contained in this manual. Refer to Appendix B, Equipment List for a complete list of part numbers required for completing this installation.

Writing styles

Before you begin using the Elite Panel, familiarize yourself with the stylistic conventions used in this manual:

Bold type	Indicates text that you must type exactly as it appears or indicates a default value.
Italic type	Denotes a displayed variable, a variable that you must type, or is used for emphasis.
Courier font	Indicates text displayed on a computer screen.

If You Need Help

If you need technical support contact VES at (800) 274 - 9514 or email techsupport@ves-network.com.
VES technical support is available Monday through Friday, 8:00 AM to 6:00 PM, Eastern Standard Time.

Contacting VES Tech Support

On-site technicians familiar with the product issue should contact VES Tech Support and include the:

- Product part number
- Purchase order or VES order number
- Product serial number
- Current function of the product
- Expected function of the product
- Installation of the product

RMA Returns Required

A Return Material Authorization (RMA) must be assigned to all products returning to VES. VES Tech Support will assign an RMA to a returning product after recording information collected from the on-site technician. VES cannot not accept product-returns that do not include an accompanying RMA number.

An RMA number is assigned when:

- A product issue is acknowledged by a VES Tech Support representative
- A product was damaged during shipping
- An order was placed using an incorrect part number *
- An order was placed using an incorrect part quantity *
- An order is no longer required *

** Restocking fees may apply.*

Warranty Returns

VES Tech Support can replace a defective product when the original purchase is within the warranty period defined in the sales contract. Check your sales-contract for more information or contact your VES sales representative about the warranty period described in your sales-contract.

Warranty products that have been placed in service will be repaired or replaced by VES.
Warranty products that have *not* been placed in service will be returned to VES stock and an equivalent credit will be provided to the contractor.

Advanced Replacements

Suspect-products that fail to operate in the field can be replaced quickly using the advanced replacement process. The advanced replacement process is available to all contractors who maintain an acceptable line of credit with VES.

Initiate the advanced replacement process by requesting an RMA number from a VES Tech Support representative. Advanced replacements can be shipped to your location when the suspect-product is covered under warranty and when a replacement product is in stock. All advanced replacement products are shipped UPS ground.

Expedited Replacements

Advanced replacements can be expedited at the request of the contractor. Shipping costs associated with this process are the responsibility of the contractor.

Returning Products

Suspect products returning to VES using the advanced replacement process must be received 30 days from the RMA issue-date. Contractors can be billed for returning products received following this 30 day period.

Suspect-Product Testing

Suspect-products returned to VES are tested to confirm operating failures experienced in the field.
If the suspect-product is found to be functional, contractors must absorb the following expenses:

- Shipping of the advanced replacement product
- Return-shipping of the suspect-product
- Cost of the advanced replacement product

Product Return Address

Prominently display the RMA number on all packages sent to VES for return.
Ship all return products to:
Attention: RMA # _____________
VES, LLC
620 Allendale Road, Suite 175
King of Prussia, PA. 19406

Section 2

Overview

Models of the A-Series Elite Panel operate SLC devices using Apollo protocol.

The Elite Panel accepts a variety of industry standard devices for FACP monitoring and reporting.
Link the Elite Panel with other panels using the proprietary eNet to monitor conditions between panels. Provide reports concerning these conditions to monitoring-centers using a standard TELCO line.

Points and Addresses

Points and addresses are fundamental to the operation of Elite monitoring and reporting. Devices are identified as points when connected to the Elite Panel. Device points are assigned addresses when configured on the Elite Panel using the eSP Discovery application. Each Elite Panel supports a maximum of 127 points per loop without subpoints or 381 points per loop when utilizing subpoints.

Elite Panels support a point and subpoint maximum of 800 addresses per panel.
Do not exceed this 800 address maximum when assigning subpoints to points on Elite Panels.

Contact ID Address Restrictions

Address restrictions effect all models of the Elite Panel when using the Contact ID format for monitoring-center communication.

CAUTION !

Do not assign analog-sounder-bases using the Contact ID digital communication format.
The address range provided by the Contact ID format is not large enough to accept the range of addressing required for reporting analog-sounder-base status.

The Contact ID format limits reporting to an address of 99. Configuration features in the eSP Discovery application restrict the use of the Contact ID format when selecting addresses above 99. The Contact ID format can be used for devices other than analog-sounder-bases as long as the device address and sub address are below 99.

FACP reporting can be changed from point reporting to zone reporting when the limit of 99 addresses per loop cannot be avoided. Zone reporting can be used to resolve address assignments in excess of 99 but doing so reduces overall reporting granularity.

Models of the Elite Panel can be programmed for the SIA or Contact ID digital communication format. The SIA and Contact ID format provides status monitoring and reporting to industry-standard receivers at the monitoring-center.

Both of these digital communication formats provide a range of addressing for device-points and sub-points on the Elite Panel. The SIA format allows full reporting from all device-points and sub-points. The Contact ID format provides a limited range of reporting from device-points. The eSP Discovery application uses an open protocol to assign device addresses to the Elite Panel.

Reference Appendix B, “Equipment List” for all models effected by restrictions of the Contact ID format.

Hardware Features

All Elite Panels contain a 4 Amp OEM 1 Power Supply, Control Unit Board, Batteries and Panel Annunciator Board.

The figure below illustrates internal components of the Elite Panel:

Figure 2-1
Internal Components

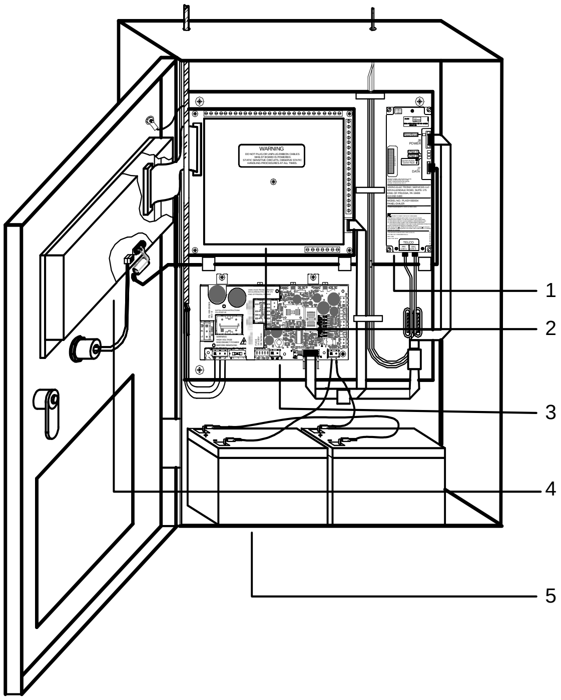

Key	Description
1	Modem-DACT Ethernet
2	Control Unit Board
3	4 Amp OEM 1 Power Supply
4	Panel Annunciator Board
5	Batteries

Panel Controls and Indicators

The Elite front-panel contains the following controls and indicators:

- LCD display
- Upper-control-pad
- Lower-control-pad
- Left-panel-indicators
- Right-panel-indicators

The figure below illustrates the Elite front-panel:

Figure 2-2
Controls and Indicators

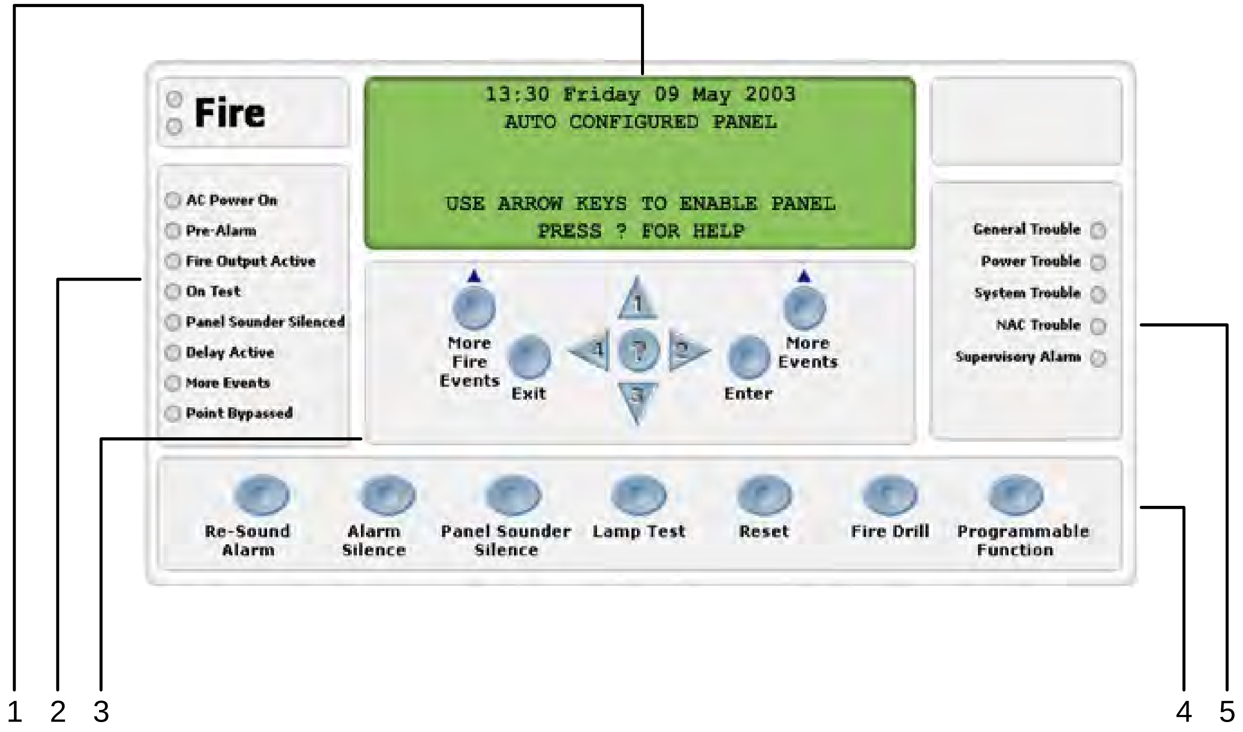
Fire
13:30 Friday 09 May 2003
AUTO CONFIGURED PANEL
USE ARROW KEYS TO ENABLE PANEL
PRESS ? FOR HELP
AC Power On
Pre-Alarm
Fire Output Active
On Test
Panel Sounder Silenced
Delay Active
More Events
Point Bypassed
More Fire Events
Exit
1
4
?
2
3
Enter
More Events
General Trouble
Power Trouble
System Trouble
NAC Trouble
Supervisory Alarm
Re-Sound Alarm
Alarm Silence
Panel Sounder Silence
Lamp Test
Reset
Fire Drill
Programmable Function
1
2
3
4
5

Key	Description
1	LCD display
2	Left-panel-indicators
3	Upper-control-pad
4	Lower-control-pad
5	Right-panel-indicators

Controls

The Elite contains upper-panel and lower-panel control-pads.

Upper-Control-Pad

The figure below illustrates the Elite upper-control-pad:

Figure 2-1
Upper-Control-Pad

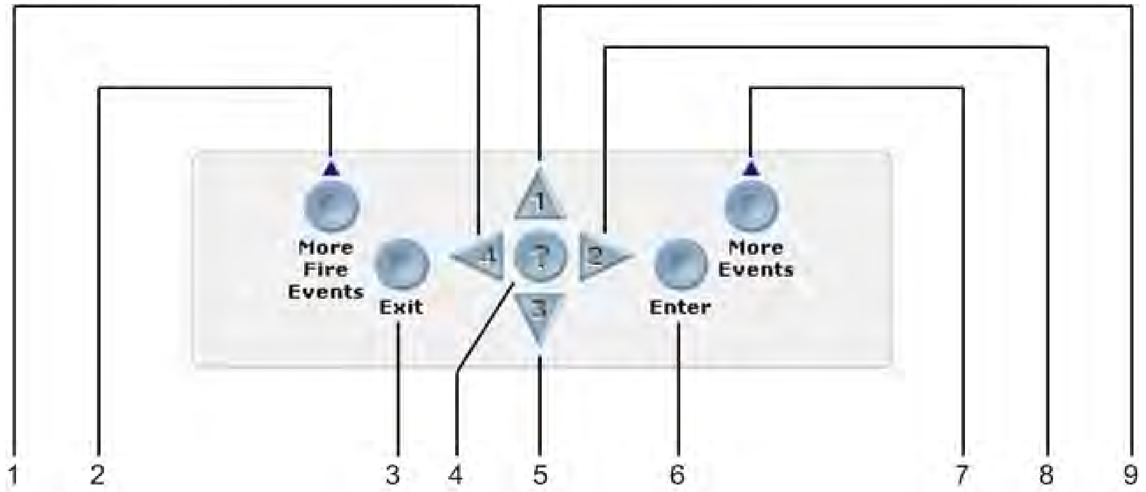

Key	Name	Description
1	Central keypad number four	Navigates menu selections to the left.
2	More Fire Events	Displays the number of alarms present on the Elite Panel and overrides the display provided by menu navigation.
3	Exit	Cancels the current menu selection.
4	Central keypad question mark	Provides a “help screen” for the current menu display and also displays status. For example, recommendations are displayed during alarm or fault conditions. If a menu function is accessed then help relating to that function will be displayed.
5	Central keypad number three	Navigates menu selections down.
6	Enter	Enables the menu selection.
7	More Events	Displays the number of events present and overrides menu navigation. Provides event status for Fire, Pre-Alarm, Trouble, Disablements and Other.
8	Central keypad number two	Navigates menu selections to the right.
9	Central keypad number one	Navigates menu selections up.

Lower-Control-Pad

The figure below illustrates the Elite lower-control-pad:

Figure 2-4
Lower-Control-Pad

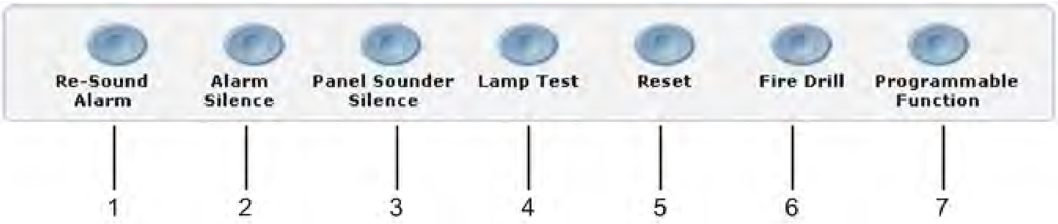

Key	Name	Description
1	Re-Sound Alarm	Re-sounds the alarm when sounders are muted using the Alarm Silence button.
2	Alarm Silence	Silences NACs connected to the Elite Panel after receiving authorization through Access Level 2.
3	Panel Sounder Silence	Mutes the internal buzzer of the Elite Panel. No other sounder outputs are affected by this operation.
4	Lamp Test	Tests front-panel indicators and the internal buzzer by illuminating all LEDs while darkening the front-panel display and sounding the buzzer.
5	Reset	Resets latching inputs such as fire and pre-alarm events after receiving authorization through Access Level 2. Fault events are non-latching inputs and cannot be cleared by the Reset button. Non-latching inputs are cleared when faults are cleared.
6	Fire Drill	Provides a fire drill for the Elite Panel after receiving authorization through Access Level 2. During the drill: • The “On Test” LED illuminates continuously • The “Fire” LEDs blink • The internal buzzer sounds intermittently • The display provides the message, “FIRE DRILL:FIRE DRILL ZONE 00* To stop the fire drill: 1 Press 4 to display the “SET ACCESS LEVEL 2 MENU”. 2 Provide Access Level 2 authorization. 3 Press Reset or Fire Drill on the lower-control-pad.
7	Programmable Function	Activates inputs, outputs or actions defined in the configuration by the customer.

Indicators

The Elite contains left and right panel-indicators.

Left-Panel-Indicators

The figure below illustrates left-panel-indicators:

Figure 2-5
Left-Panel-Indicators

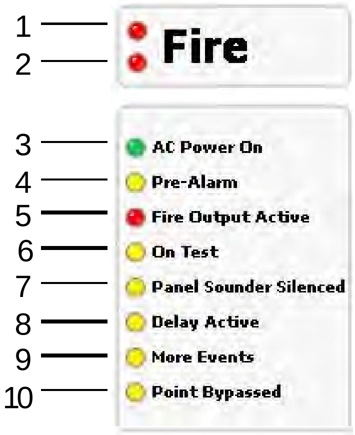
1
2
Fire
3
4
5
6
7
8
9
10
AC Power On
Pre-Alarm
Fire Output Active
On Test
Panel Sounder Silenced
Delay Active
More Events
Point Bypassed

Key	LED	Color
1	Fire, NAC Output State - Flashing = NACs Activated - ON Continuous = NACs silenced - OFF = Panel and NACs Reset	Red
2	Fire, NAC Output State - Flashing = NACs Activated - ON Continuous = NACs silenced - OFF = Panel and NACs Reset	Red
3	AC Power On	Green
4	Pre Alarm	Yellow
5	Fire Output Active	Red
6	On Test	Yellow
7	Panel Sounder Silenced	Yellow
8	Delay Active	Yellow
9	More Events	Yellow
10	Point Bypassed	Yellow

Right Panel Indicators

The figure below illustrates right panel indicators:

Figure 2-1
Right Panel Indicators

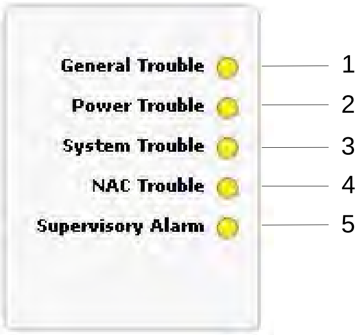
General Trouble
Power Trouble
System Trouble
NAC Trouble
Supervisory Alarm
1
2
3
4
5

Key	Description	Color
1	General Trouble	Yellow
2	Power Trouble	Yellow
3	System Trouble	Yellow
4	NAC Trouble	Yellow
5	Supervisory Alarm	Yellow

Device Connections

The Elite Panel provides connections for Signaling Line Circuits (SLCs), Notification Appliances (NAs) and Output Circuits. It also provides an auxiliary 24 VDC power source. These connections are provided on vertical and horizontal terminal strips of the Control Unit Board. The horizontal strip is “Terminal Strip X1”. The vertical strip is “Terminal Strip X2”.

The figure below illustrates Elite Panel terminal connections on the Control Unit Board:

Figure 2-1
Control Unit Board Terminal Connections

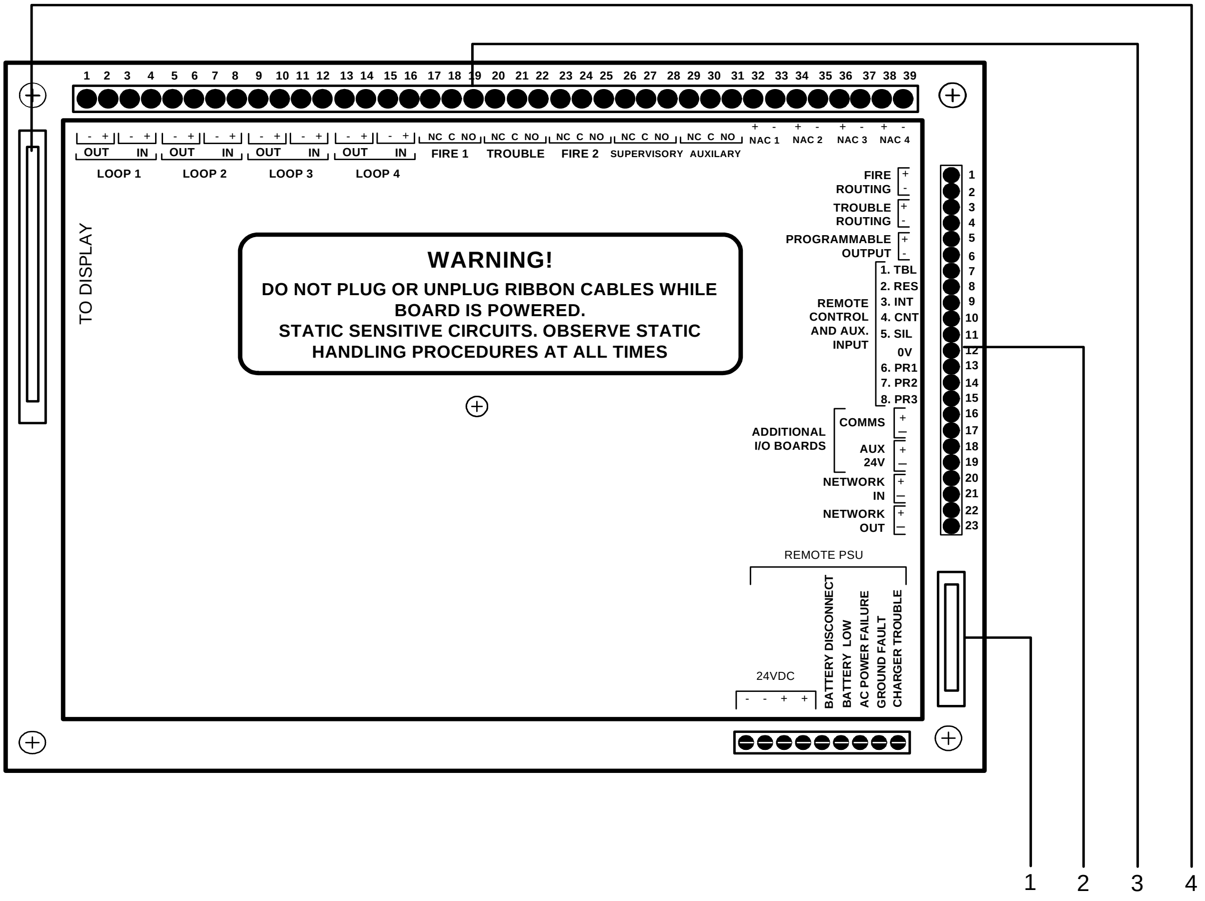
1 2 3 4 5 6 7 8 9 10 11 12 13 14 15 16 17 18 19 20 21 22 23 24 25 26 27 28 29 30 31 32 33 34 35 36 37 38 39
- + - + OUT IN LOOP 1
- + - + OUT IN LOOP 2
- + - + OUT IN LOOP 3
- + - + OUT IN LOOP 4
NC C NO FIRE 1
NC C NO TROUBLE
NC C NO FIRE 2
NC C NO SUPERVISORY
NC C NO AUXILARY
+ - NAC 1
+ - NAC 2
+ - NAC 3
+ - NAC 4
TO DISPLAY
WARNING!
DO NOT PLUG OR UNPLUG RIBBON CABLES WHILE BOARD IS POWERED.
STATIC SENSITIVE CIRCUITS. OBSERVE STATIC HANDLING PROCEDURES AT ALL TIMES
FIRE ROUTING + -
TROUBLE ROUTING + -
PROGRAMMABLE OUTPUT + -
REMOTE CONTROL AND AUX. INPUT
1. TBL
2. RES
3. INT
4. CNT
5. SIL
0V
6. PR1
7. PR2
8. PR3
ADDITIONAL I/O BOARDS
COMMS + –
AUX 24V + –
NETWORK IN + –
NETWORK OUT + –
1 2 3 4 5 6 7 8 9 10 11 12 13 14 15 16 17 18 19 20 21 22 23
REMOTE PSU
24VDC
- - + +
BATTERY DISCONNECT
BATTERY LOW
AC POWER FAILURE
GROUND FAULT
CHARGER TROUBLE
1
2
3
4

Key	Name	Description
1	Jack J2	The Jack J2 connection provides 24VDC power from the 4 Amp OEM 1 Power Supply.
2	Terminal Strip X2	The vertical terminal strip provides connections for output devices and auxiliary 24 VDC power.
3	Terminal Strip X1	The horizontal terminal strip provides connections for SLC and NAC devices.
4	Jack J1	The Jack J1 connection provides data and power to the Panel Annunciator Board.

Terminal Strip X1

Terminal strip X1 provides SLC connections on pins 1 through 16 and NAC connections on pins 32 through 39.

The figure below illustrates terminal strip X1.

Figure 2-8
Terminal Strip X1

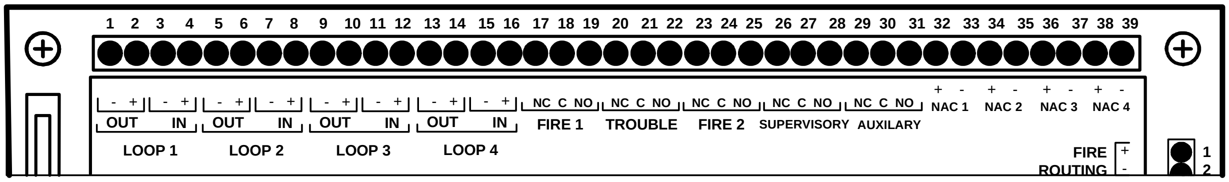
1 2 3 4 5 6 7 8 9 10 11 12 13 14 15 16 17 18 19 20 21 22 23 24 25 26 27 28 29 30 31 32 33 34 35 36 37 38 39
- + - + - + - + - + - + - + - +
OUT IN OUT IN OUT IN OUT IN
LOOP 1
LOOP 2
LOOP 3
LOOP 4
NC C NO
FIRE 1
NC C NO
TROUBLE
NC C NO
FIRE 2
NC C NO
SUPERVISORY
NC C NO
AUXILARY
+ -
NAC 1
+ -
NAC 2
+ -
NAC 3
+ -
NAC 4
FIRE
ROUTING
+
-
1
2

Terminal Strip X2

Terminal strip X2 provides output connections on pins 1 through 6 and auxiliary 24 VDC on pins 18 and 19.

The figure below illustrates terminal strip X2.

Figure 2-9
Terminal Strip X2

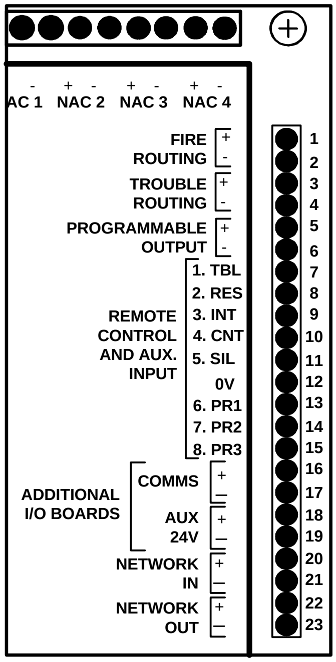
- + - + - + -
AC 1 NAC 2 NAC 3 NAC 4
FIRE ROUTING
TROUBLE ROUTING
PROGRAMMABLE OUTPUT
REMOTE CONTROL AND AUX. INPUT
1. TBL
2. RES
3. INT
4. CNT
5. SIL
0V
6. PR1
7. PR2
8. PR3
ADDITIONAL I/O BOARDS
COMMS
AUX 24V
NETWORK IN
NETWORK OUT
+
-
1 2 3 4 5 6 7 8 9 10 11 12 13 14 15 16 17 18 19 20 21 22 23

4 Amp OEM 1 Power Supply

The 4 Amp OEM1 Power Supply is supplied with all Elite Panels and meets UL 864, 9th edition. It provides a 112 Watt (4 Amp) off-line switch-mode power-source for the Elite Panel as well as a charger for the standby batteries. The 4 Amp OEM1 Power Supply can operate at 120 or 240 VAC. A jumper connection is provided on the power supply to switch between these operating voltages. Connecting the jumper provides 120 VAC operation and removing it provides 240 VAC operation.

Reference Section 3,“Installation”,“Wiring the 4 Amp OEM1 Power Supply” for locating and removing the jumper connection.

Features of the 4 Amp OEM 1 Power Supply include:

Battery-backup	Provides battery power to the load when the AC input of the 4 Amp OEM 1 Power Supply falls below the rated level. The voltage at the load remains within the specified range during these switching-transitions.
Battery-boost	Boosts voltage to the DC output (TB4) when the battery voltage drops due to a low-battery condition.
Short-circuit protection	Provides a shut down on the load side of the 4 Amp OEM 1 Power Supply when the load-current exceeds the maximum level.
Automatic-retry	Restores output to the load when operating conditions return to nominal levels. This feature restores voltage levels at the load following conditions such as over-current and battery depletion.
Status	Provides an LED status display for normal and fault conditions. Normal conditions occur when the 4 Amp OEM 1 Power Supply is operating in an acceptable range. Fault conditions occur when the 4 Amp OEM 1 Power Supply is not operating in an acceptable range.
FACP Supervision	The AC input to the 4 Amp OEM 1 Power Supply is supervised by the Elite Panel.

Connections

The figure below illustrates connections of the 4 Amp OEM 1 Power Supply:

Figure 2-10
Connections

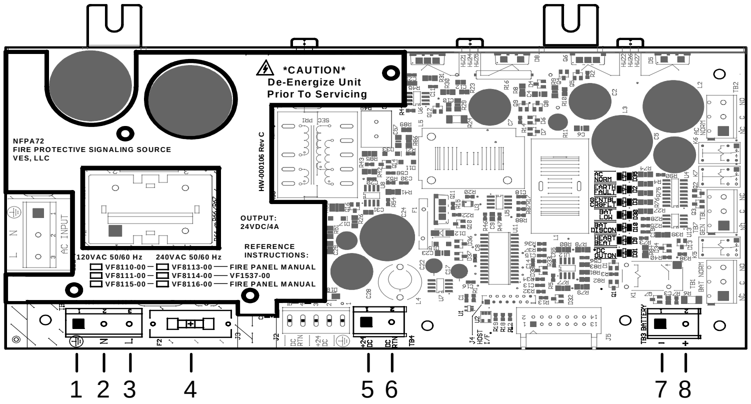
CAUTION
De-Energize Unit
Prior To Servicing
NFPA72
FIRE PROTECTIVE SIGNALING SOURCE
VES, LLC
HW-000106 Rev C
OUTPUT:
24VDC/4A
REFERENCE
INSTRUCTIONS:
AC INPUT
120VAC 50/60 Hz
240VAC 50/60 Hz
VF8110-00
VF8111-00
VF8115-00
VF8113-00
VF8114-00
VF8116-00
FIRE PANEL MANUAL
VF1537-00
FIRE PANEL MANUAL
TB3 BATTERY
1
2
3
4
5
6
7
8

TB4 is not power limited.

1 TB6 - Input for AC earth ground.

2 TB6 - Input for AC neutral (N).

3 TB6 - Input for AC line (L).

4 F2 - Fuse shall be replaced with the type identified in the Appendix A, Specifications.

5 TB4 - DC output for +24 VDC.

6 TB4 - DC output for DC RTN.

7 TB3 - (-) battery.

8 TB3 - (+) battery.

Indicators

The figure below illustrates LED indicators of the 4 Amp OEM 1 Power Supply.

Figure 2-11
LED Indicators

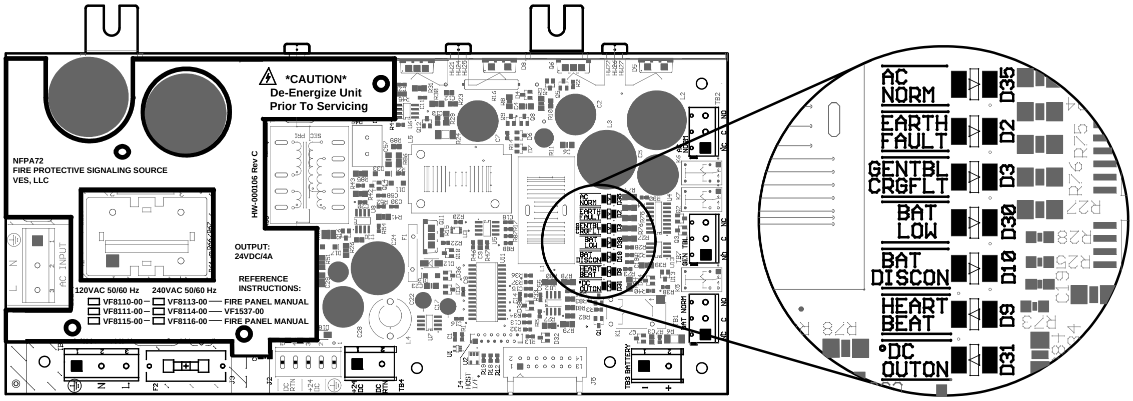
CAUTION
De-Energize Unit
Prior To Servicing
NFPA72
FIRE PROTECTIVE SIGNALING SOURCE
VES, LLC
HW-000106 Rev C
OUTPUT:
24VDC/4A
REFERENCE
INSTRUCTIONS:
120VAC 50/60 Hz
240VAC 50/60 Hz
VF8110-00
VF8111-00
VF8115-00
VF8113-00
VF8114-00
VF8116-00
FIRE PANEL MANUAL
VF1537-00
FIRE PANEL MANUAL
AC INPUT
TB3 BATTERY
AC NORM D35
EARTH FAULT D2
GENTBL CRGFLT D3
BAT LOW D30
BAT DISCON D10
HEART BEAT D9
DC OUTON D31

The table below describes indicators of the 4 Amp OEM 1 Power Supply:

Table 2-1
Indicators

LED	Normal	Fault	Description
AC NORM	Green	Off	The AC Normal LED identifies the status of the AC input at TB6.
EARTH FAULT	Off	Yellow	The Earth Fault LED identifies the status of the DC output TB4.
GENTBL CRGFLT	Off	Yellow	The General Trouble Charge Fault LED identifies the status of the battery charging output at TB3.
BAT LOW	Off	Yellow	The Battery Low LED identifies the voltage-level status of the battery.
BAT DISCON	Off	Yellow	The Battery Disconnect LED identifies the connection status of the battery.
HEART BEAT	Flashing Yellow	Not Flashing	The Heart Beat LED identifies the health of the 4 Amp OEM 1 Power Supply.
DC OUTON	Green	Off	The DC Output On LED identifies the presence of 24 VDC at TB4.

Section 3

Installation

This section provides instructions for connecting the cables, mounting and testing the Elite Panel for installation.

General Installation Checklist

To complete the installation:

1. Create a plan and checklist for installing the Elite Panel.
2. Remove the Elite Panel from its packaging and check its contents.
3. Determine the battery capacity of the Elite Panel.
4. Mark the location for anchoring the Elite Panel to the premises-wall.
5. Remove the door from the Elite Panel.
6. Remove the back-plate from the Elite Panel.
7. Remove the knock-out tabs from the cabinet of the Elite Panel.
8. Anchor the empty cabinet of the Elite Panel to the premises-wall.
9. Thread the power-cable into the left-top-side of the Elite Panel and secure it.
10. Thread the TELCO cable into the right-top-side of the Elite Panel cabinet and secure it.
11. Remove debris from inside the cabinet of the Elite Panel.
12. Replace the back-plate in the cabinet of the Elite Panel.
13. Replace the door on the Elite Panel.
14. Connect initiating devices, notification appliances and signalling circuits.
15. Connect cabling for Elite Panel serial data, TELCO and power.
16. Test the Elite Panel installation.

Install this product in accordance with NFPA 72, the National Electrical Code and all local codes.

Before You Begin

Before you begin the installation, take a few minutes to review the installation information, gather the required items, and complete the tasks listed below to make the installation as quick and easy as possible.

1. Create a plan and checklist before beginning the installation process. Planning can reduce the number of problems that can occur during installation.
2. Select a mounting site for the Elite Panel that is suitable for its operating environment. The Elite Panel installation site should be clean and dry and not subject to shock or vibration. Ensure that the Elite Panel environment is free from wire ends, knockout discs and any other debris.

CAUTION!

The Elite Panel installation must be performed by qualified personnel familiar with electronic components. Electronic components within the Elite Panel are vulnerable to damage from electrostatic discharge. Ground straps must be worn by installers before handling Elite Panel circuit boards to prevent electrostatic discharge damage.

3 Verify that you received the following items with the Elite Panel:

Item	Quantity	Description
4 Amp OEM 1 Power Supply	1	The 4 Amp OEM 1 Power Supply is the power-source for the Elite Panel. All Elite Panels contain a 4 Amp OEM 1 Power Supply.
Control Unit Board	1	The Control Unit Board provides connections for two loop addressable monitoring. It also provides input and output connections for alarm and sensor devices. All Elite Panels contain a Control Unit Board.
Panel Annunciator Board	1	The Panel Annunciator Board provides Elite Panel control and display. All Elite Panels contain a Panel Annunciator Board.
Elite Panel Install Manual	1	The Elite Panel Installation Manual contains installation instructions for mounting, cabling and testing the Elite Panel.

4 Acquire the following items that are not included with the Elite Panel, but may be required for the installation:

Item	Quantity	Description
Media Gateway	1	Provides panel-network-monitoring by communicating with devices connected on VESNet A and VESNet B. monitoring-centers receive network reporting from the Media Gateway using TELCO. Programmable features of the Media Gateway provide options for configuring levels and status-reporting-intervals. *The “No Communication” model of the Elite does not contain TELCO reporting features such as those provided on the Media Gateway.*
NIC	1	Provides panel-network-monitoring by communicating with devices connected on VESNet A and VESNet B. The NIC sends monitoring information to the Media Gateway on VESNet A and VESNet B. Programmable features are provided for emergency and status-reporting options. *The “No Communication” model of the Elite does not contain TELCO reporting features such as those provided on the NIC.*
Modem-DACT Ethernet	1	Provides TELCO reporting features to the monitoring-center. *The “No Communication” model of the Elite does not contain TELCO reporting features such as those provided on the Modem-DACT Ethernet.*
eNet Interface	1	The eNET Interface is an optional feature for networking communication between Elite Panels. Up to sixty-four Elite Panels can be networked with the eNet Interface. Networks using the eNet Interface can be configured to provide messaging on remote annunciators as well to operate control panel devices. The eNet Interface connects to the Panel Annunciator Board of the Elite Panel and is held in place by two stand-off-screws.

Item	Quantity	Description
Ribbon Power Cable	1	The Ribbon Power Cable connects the Elite Panel to the 4 Amp OEM 1 Power Supply. The Ribbon Power Cable contains three 14 pin IDC connectors. One end of this cable connects to the 4 Amp OEM 1 Power Supply. The second end of this cable connects to the Control Unit Board. The third end of this cable connects to the Modem-DACT Ethernet, NIC or Media Gateway.
Dual phone Cable	1	Connects TELCO to Lines 1 and 2 of the Modem-DACT Ethernet or Media Gateway.
Mounting Hardware	1	The mounting hardware that secures the Elite Panel to the premises-wall is not provided in the Elite Panel packaging.
Ground Strap	1	A ground strap is required for handling Elite Panel circuit boards. *The ground strap is not provided in the Elite Panel packaging.*

CAUTION!

⚠ Disconnect power before removing Elite Panel circuit boards. Never insert or remove circuit boards while the Elite Panel power is on. The Elite Panel can be damaged if its circuit boards are removed while under power.

Determining System Current Draw

Determine the current draw of the fire alarm system for alarm and standby conditions. Use these maximum current values to obtain the battery capacity of the fire alarm system as well as to confirm the operating constraints of the system.

Standby-Battery Capacity

Perform the installation only after calculations have been completed for a suitable battery size.
Battery standby-hours are dependant on battery capacity and load of the FACP system. *Reference Appendix C, Calculations to determine the standby-battery capacity of the system.*

Operating Constraints

Installation of the FACP must include the operating constraints of the system to maintain continuous signal monitoring and reporting. Operating constraints are based on the current-driving capability of the Elite outputs and the external loading caused by devices and cabling.

External loads connected to the Elite outputs must be chosen within the driving limits of each output. The loading placed on these outputs can be caused by individual or multiple combinations of signaling line circuits, notification appliances and initiating devices. Cabling is also an external loading property on the Elite outputs. Select cabling size and length based on the type of circuit connected to the output of the Elite Panel.

Reference Appendix A, Specifications and Appendix C, Calculations to determine specific operating constraints for devices and cabling connected to the Elite Panel.

Wiring the 4 Amp OEM 1 Power Supply

Provide an AC power connection to terminal block TB6. Protect AC power to branch circuits with a 20 Amp fuse. The 4 Amp OEM 1 Power Supply can operate at 120 or 240 VAC. The J1 jumper connection on the power supply provides 120 VAC operation. Removing jumper J1 provides 240 VAC operation.

To connect AC power to the 4 Amp OEM 1 Power Supply:

1. Connect a wire from the ground-terminal of TB6 to earth-ground.
2. Connect a wire from the ground-terminal of TB6 to the ground-stud of the cabinet.
3. Connect a wire from the neutral-terminal (N) of TB6 to the neutral of the power-source.
4. Connect a wire from the line-terminal (L) of TB6 to the line of the power-source.
5. Remove jumper J1 from the power supply to provide 240 VAC operation.
   Connect jumper J1 to the power supply to provide120 VAC operation.

The figure below illustrates connections of the 4 Amp OEM 1 Power Supply:

Figure 3-1
Wiring the 4 Amp OEM 1 Power Supply

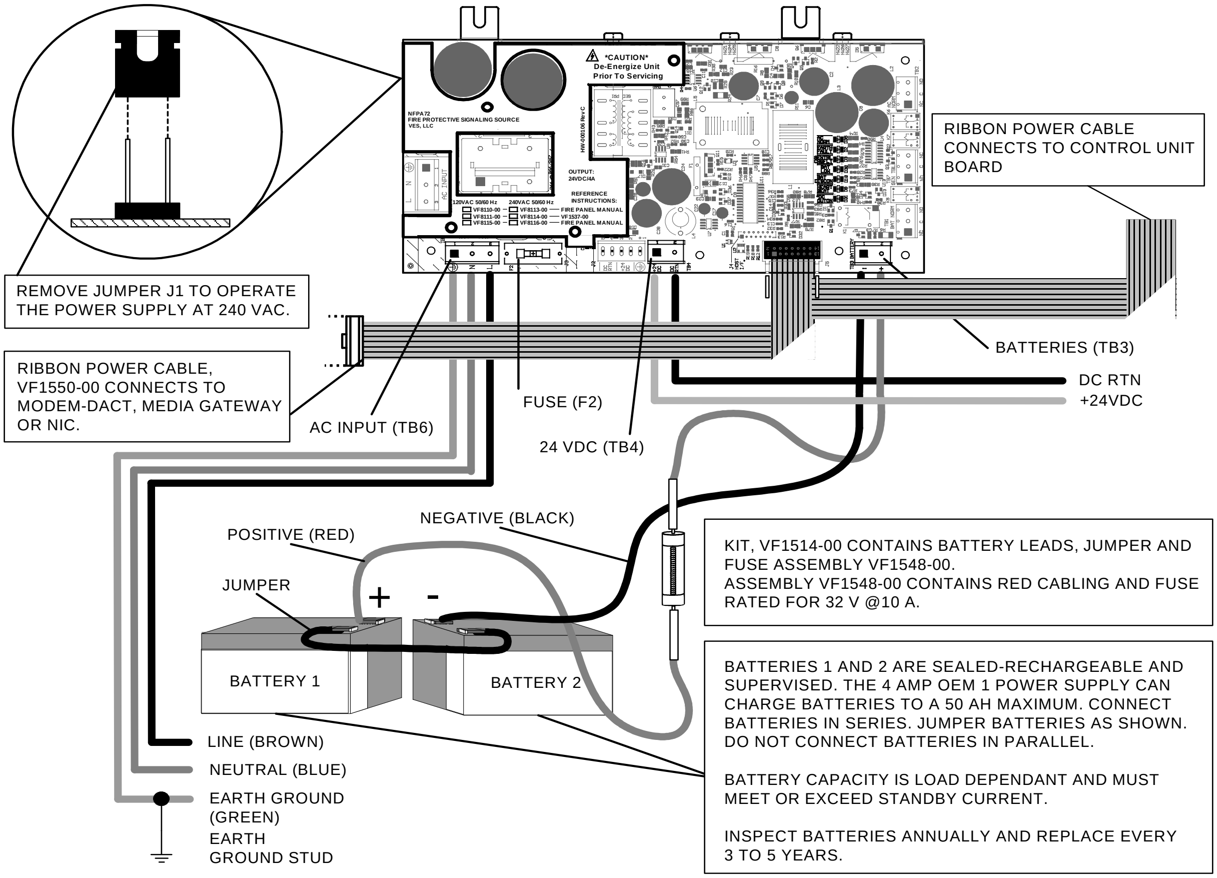
CAUTION
De-Energize Unit
Prior To Servicing
NFPA72
FIRE PROTECTIVE SIGNALING SOURCE
VES, LLC
OUTPUT:
24VDC/4A
REFERENCE
INSTRUCTIONS:
120VAC 50/60 Hz
240VAC 50/60 Hz
FIRE PANEL MANUAL
RIBBON POWER CABLE CONNECTS TO CONTROL UNIT BOARD
REMOVE JUMPER J1 TO OPERATE THE POWER SUPPLY AT 240 VAC.
RIBBON POWER CABLE, VF1550-00 CONNECTS TO MODEM-DACT, MEDIA GATEWAY OR NIC.
AC INPUT (TB6)
FUSE (F2)
24 VDC (TB4)
BATTERIES (TB3)
DC RTN
+24VDC
POSITIVE (RED)
NEGATIVE (BLACK)
JUMPER
+
-
BATTERY 1
BATTERY 2
LINE (BROWN)
NEUTRAL (BLUE)
EARTH GROUND (GREEN)
EARTH GROUND STUD

KIT, VF1514-00 CONTAINS BATTERY LEADS, JUMPER AND FUSE ASSEMBLY VF1548-00.
ASSEMBLY VF1548-00 CONTAINS RED CABLING AND FUSE RATED FOR 32 V @10 A.

BATTERIES 1 AND 2 ARE SEALED-RECHARGEABLE AND SUPERVISED. THE 4 AMP OEM 1 POWER SUPPLY CAN CHARGE BATTERIES TO A 50 AH MAXIMUM. CONNECT BATTERIES IN SERIES. JUMPER BATTERIES AS SHOWN. DO NOT CONNECT BATTERIES IN PARALLEL.

BATTERY CAPACITY IS LOAD DEPENDANT AND MUST MEET OR EXCEED STANDBY CURRENT.

INSPECT BATTERIES ANNUALLY AND REPLACE EVERY 3 TO 5 YEARS.

Connecting Standby-Batteries

To provide a backup function for the Elite Panel, connect the standby-batteries and apply 120 VAC power to the input of the 4 Amp OEM 1 Power Supply. This process allows the Elite Panel to identify the presence of the batteries for supervising and charging. The standby-batteries can be connected before or after providing power to the Elite Panel.

Connect two batteries to the 4 Amp OEM 1 Power Supply in series. Do not parallel batteries together to obtain a higher Ampere Hour rating. Refer to Figure 3-1 for an illustration of this connection.
To connect batteries:

1. Connect the negative terminal of Battery 2 to TB3, pin 1.
2. Connect the negative terminal of Battery 1 to the positive terminal of Battery 2.
3. Connect the positive terminal of Battery 1 to TB3, pin 2.

Reference Section 5, “Maintenance and Repair for replacement requirements for the standby-batteries”.
FM Approval requires secondary power to provide a minimum of 90 hours of standby operation followed by a minimum of 10 minutes of alarm operation.

Connecting 24VDC Devices

Refer to Figure 3-1 for an illustration of this connection.
To connect 24 VDC devices to the 4 Amp OEM 1 Power Supply:

1. Disconnect the battery and shut the power off at the 120 VAC source.
2. Connect + 24 DC to terminal block TB4, pin 1.
3. Connect DC RTN to terminal block TB4, pin 2.
4. Re-connect the battery and restore power at the 120 VAC source.

Connecting Class A Loops

Connect Class A loops to terminal-strip X1 on 2 and 4 loop models of the Elite Panel.
Terminals 1 through 8 of terminal-strip X1 are assigned to 2 loop models of the Elite Panel.
Terminals 1 through 16 of terminal-strip X1 are assigned to 4 loop models of the Elite Panel.

Terminate unused Loops of the Elite Panel with zero-ohm shorting-jumpers. Connect zero-ohm shorting-jumpers on the Elite Panel from OUT (-) to IN (-) and OUT (+) to IN (+). The Elite Panel provides a trouble signal when unused loops are not terminated. SLC Loops 1 though 4 of the Elite Panel are supervised.
The figure below illustrates a Class A Style 7 connection on Loop 1 with eight short-circuit-isolators and six sensors:

Figure 3-2
Class A Style 7 Connection

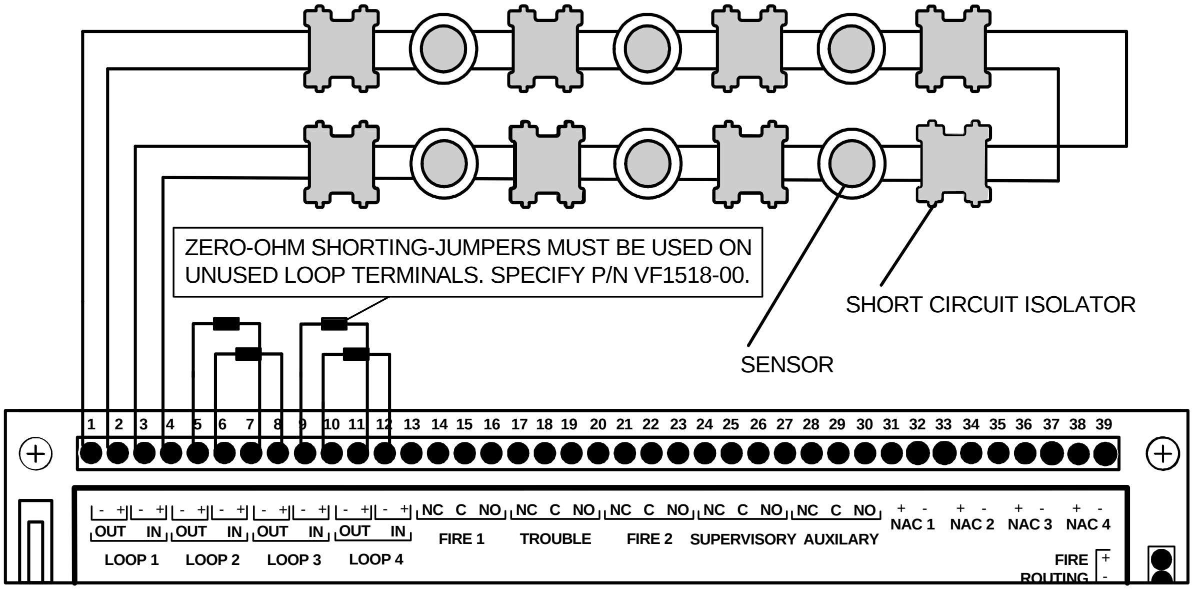

ZERO-OHM SHORTING-JUMPERS MUST BE USED ON UNUSED LOOP TERMINALS. SPECIFY P/N VF1518-00.

SHORT CIRCUIT ISOLATOR
SENSOR
1 2 3 4 5 6 7 8 9 10 11 12 13 14 15 16 17 18 19 20 21 22 23 24 25 26 27 28 29 30 31 32 33 34 35 36 37 38 39
- + - + - + - + - + - + - + - +
OUT IN OUT IN OUT IN OUT IN
LOOP 1
LOOP 2
LOOP 3
LOOP 4
NC C NO
FIRE 1
NC C NO
TROUBLE
NC C NO
FIRE 2
NC C NO
SUPERVISORY
NC C NO
AUXILARY
+ -
NAC 1
+ -
NAC 2
+ -
NAC 3
+ -
NAC 4
FIRE ROUTING
+
-

Reference manufacturer specifications for Short Circuit Isolator Module and Sensor connections.
The Loop termination jumpers shown are provided in Resistor Kit (8) Zero Ohm.

End Of Line Resistors (EOLRs) are not used on Class A, style 6 or 7 loops.

Reference Appendix A, Specification for wire gage and length requirements for Class A SLC connections.

SLC loops must be wired with Short Circuit Isolator Modules to comply with NFPA 72, Class A Style 7.
Short Circuit Isolator Modules protect SLC loop devices from single-loop-shorts.

During an SLC loop short-circuit:

- The closest Short Circuit Isolator Modules to the short-circuit activate and respond by lighting their LED.
- Devices between the Short Circuit Isolator Modules are isolated and inoperative.
- Other devices on the SLC loop remain operational.
- The VES Elite Panel indicates a trouble condition.

To install Class A, Style 6 and Style 7 SLC loops:

- Do not use T-taps on Class A SLC loops.
  T-taps are not permitted for use on Class A SLC loops.
- Do not permit outgoing loops and return-side loops to share the same conduit or cable.
  Rout outgoing and return-side loops separately.
- Refer to NFPA 72 for additional Class A requirements.

NFPA 72, Style 7

Connect wiring in compliance with NFPA 72, Class A, Style 7 requirements.
For Class A, style 7 compliance, each device must be wired in a Closed Nipple with two surrounding Short Circuit Isolator Modules. The two Short Circuit Isolator Modules and the addressable device are enclosed individually or are shared in a common enclosure. If they are enclosed individually, the individual enclosures must be joined by “closed-nippling”.

When using Class A, Style 7 wiring, the Short Circuit Isolator Module must be installed before and after each addressable device on the SLC loop. The wiring from the control panel to the first Short Circuit Isolator Module and from the last Short Circuit Isolator Module back to the control panel must be contained in conduit.
Short Circuit Isolator Modules shall be connected less than five feet from Loops of the Elite Panel to maintain compliance with Class A, Style 7 requirements. Closed Nipple devices share a common enclosure and include single housings or raceways.

Common Enclosure

The figure below illustrates the “common enclosure” type of Closed Nipple connection containing two short circuit isolator modules and a sensor:

Figure 3-3
Common Enclosure

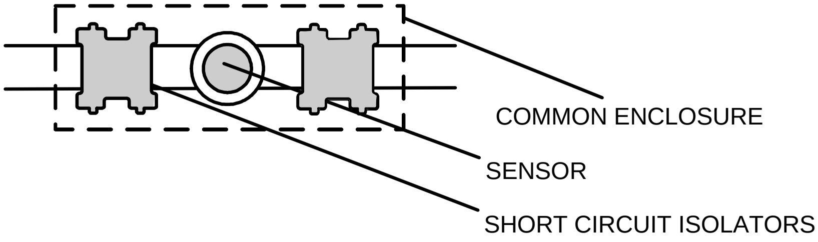

Reference manufacturer specifications for Short Circuit Isolator Module and Sensor connections.

Individual Enclosures

Closed Nipple devices that are enclosed individually are connected by “nippling”.
The figure below illustrates the “individual enclosure” type of Closed Nipple connection containing two short circuit isolator modules and a sensor.

Figure 3-4
Individual Enclosure

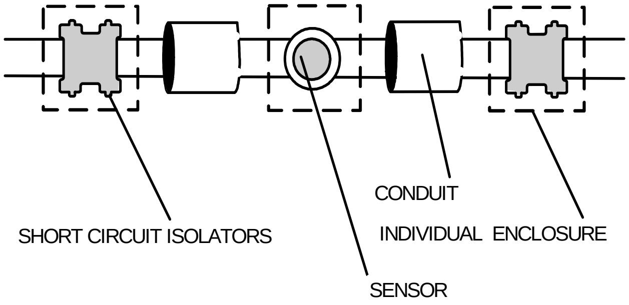

CONDUIT
SHORT CIRCUIT ISOLATORS
INDIVIDUAL ENCLOSURE
SENSOR

Reference manufacturer specifications for Short Circuit Isolator Module and Sensor connections.
The figure below illustrates three Closed Nipples on SLC Loop 1.

Figure 3-5
Class A, Style 7 Wiring Example

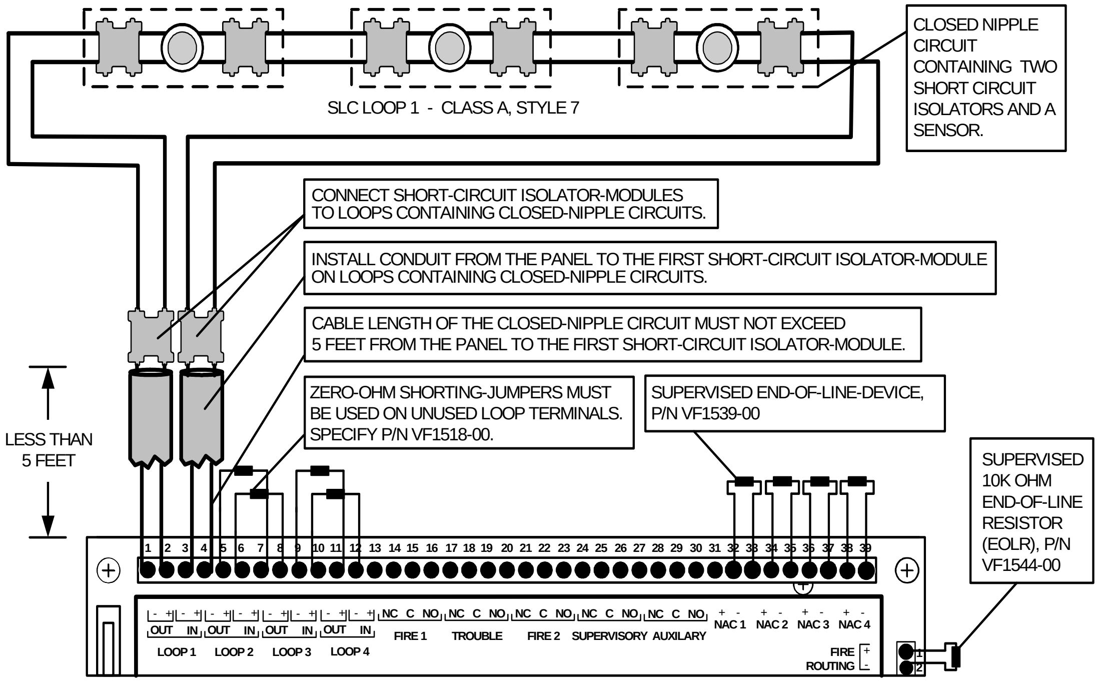

CLOSED NIPPLE CIRCUIT CONTAINING TWO SHORT CIRCUIT ISOLATORS AND A SENSOR.
SLC LOOP 1 - CLASS A, STYLE 7
CONNECT SHORT-CIRCUIT ISOLATOR-MODULES TO LOOPS CONTAINING CLOSED-NIPPLE CIRCUITS.
INSTALL CONDUIT FROM THE PANEL TO THE FIRST SHORT-CIRCUIT ISOLATOR-MODULE ON LOOPS CONTAINING CLOSED-NIPPLE CIRCUITS.
CABLE LENGTH OF THE CLOSED-NIPPLE CIRCUIT MUST NOT EXCEED 5 FEET FROM THE PANEL TO THE FIRST SHORT-CIRCUIT ISOLATOR-MODULE.
ZERO-OHM SHORTING-JUMPERS MUST BE USED ON UNUSED LOOP TERMINALS. SPECIFY P/N VF1518-00.
SUPERVISED END-OF-LINE-DEVICE, P/N VF1539-00
SUPERVISED 10K OHM END-OF-LINE RESISTOR (EOLR), P/N VF1544-00
LESS THAN 5 FEET
1 2 3 4 5 6 7 8 9 10 11 12 13 14 15 16 17 18 19 20 21 22 23 24 25 26 27 28 29 30 31 32 33 34 35 36 37 38 39
- + - + - + - + - + - + - + - +
OUT IN OUT IN OUT IN OUT IN
LOOP 1 LOOP 2 LOOP 3 LOOP 4
NC C NO NC C NO NC C NO NC C NO NC C NO
FIRE 1 TROUBLE FIRE 2 SUPERVISORY AUXILARY
+ - + - + - + -
NAC 1 NAC 2 NAC 3 NAC 4
FIRE ROUTING + -
1 2

Reference manufacturer specifications for Short Circuit Isolator Module and Sensor connections.
Connect Short Circuit Isolator Modules less than five feet from Loops of the Elite Panel to maintain compliance with Class A, style 7 requirements.

NFPA 72, Style 6

For Class A, Style 6 compliance, the Short Circuit Isolator Modules may be located at strategic locations based on the discretion of the designer or installer.

Connecting Class B Loops

Connect Class B loops to terminal-strip X1 on 2 and 4 loop models of the Elite Panel.
Pins 1 through 8 of terminal-strip X1 are assigned to 2 loop models of the Elite Panel.
Pins 1 through 16 of terminal-strip X1 are assigned to 4 loop models of the Elite Panel.

Terminate unused Loops of the Elite Panel with zero-ohm shorting-jumpers. Connect zero-ohm shorting-jumpers on the Elite Panel from OUT (-) to IN (-) and OUT (+) to IN (+). The Elite Panel provides a trouble signal when unused loops are not terminated.

The figure below illustrates Class B connections on Loop 1 of a 4 loop Elite Panel.

Figure 3-6
Class B Connections

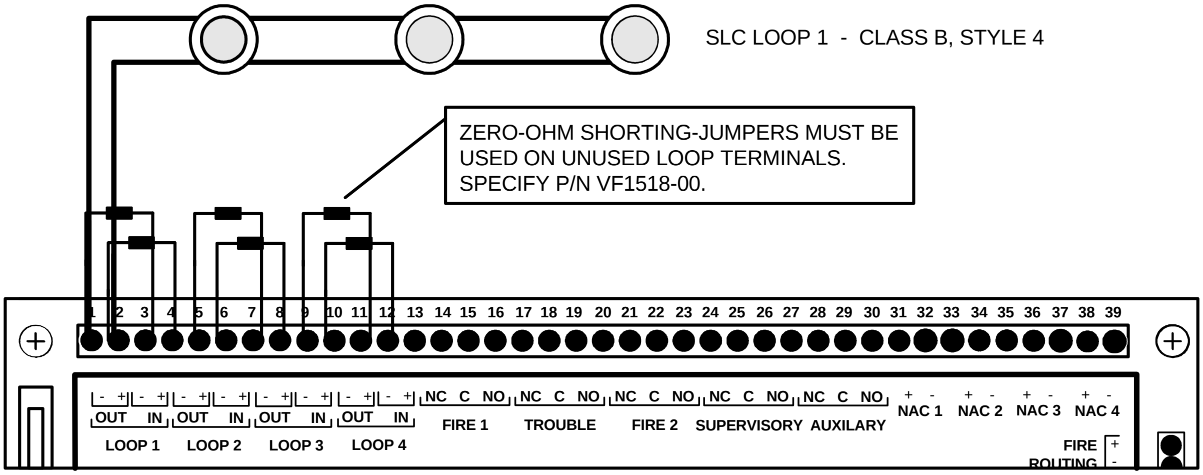
SLC LOOP 1 - CLASS B, STYLE 4
ZERO-OHM SHORTING-JUMPERS MUST BE USED ON UNUSED LOOP TERMINALS. SPECIFY P/N VF1518-00.
1 2 3 4 5 6 7 8 9 10 11 12 13 14 15 16 17 18 19 20 21 22 23 24 25 26 27 28 29 30 31 32 33 34 35 36 37 38 39
- + - + - + - + - + - + - + - +
OUT IN OUT IN OUT IN OUT IN
LOOP 1
LOOP 2
LOOP 3
LOOP 4
NC C NO NC C NO NC C NO NC C NO NC C NO
FIRE 1
TROUBLE
FIRE 2
SUPERVISORY
AUXILARY
+ - NAC 1
+ - NAC 2
+ - NAC 3
+ - NAC 4
FIRE ROUTING
+
-

Reference manufacturer specifications for Short Circuit Isolator Module and Sensor connections.
The Loop termination jumpers shown are provided in Resistor Kit (8) Zero Ohm.

End Of Line Resistors (EOLRs) are used on Class B loops.
Reference Appendix A, Specification for wire gage and length requirements for Class B SLC connections.

Installing SLC Devices

This section describes installation requirements and constraints for SLC devices on the Elite Panel. The SLC devices described in this section include detectors, addressable notification appliances and output modules.

Detector Spacing

Install SLC detectors with spacing requirements specified in section 90.19 of UL 864, 9th edition where units employing the multiple detector operation shall include guidelines for installing of a minimum of two detectors in each protected space and to reduce the detector installation spacing to 0.7 times the linear spacing in accordance with National Fire Alarm Code, NFPA 72. Also reference 55.3.1 and 55.3.2 of UL 864, 9th edition for these detector spacing requirements.

Addressable Notification Appliances and Output Modules

Addressable notification appliances or modules shall be installed so not more than one notification zone is affected by a fault condition. Install devices on an SLC loop of the Elite Panel containing one of the following methods to meet this requirement:

- Perform an SLC loop installation that does not contain output devices.
- Perform an SLC loop installation where output devices are in one zone.
- Perform an Class A, Style 7 SLC loop installation where output devices are in different zones.
- Perform a Class A SLC loop installation with output devices in separate zones, short-circuit-isolators on SLC Loops and output devices on SLC loops with separate notification zones.

Reference "Connecting Class A Loops" for example-circuits containing these features

The figure below illustrates an example of this Class A SLC loop connection:

Figure 3-7
Class A SLC Loop Connection

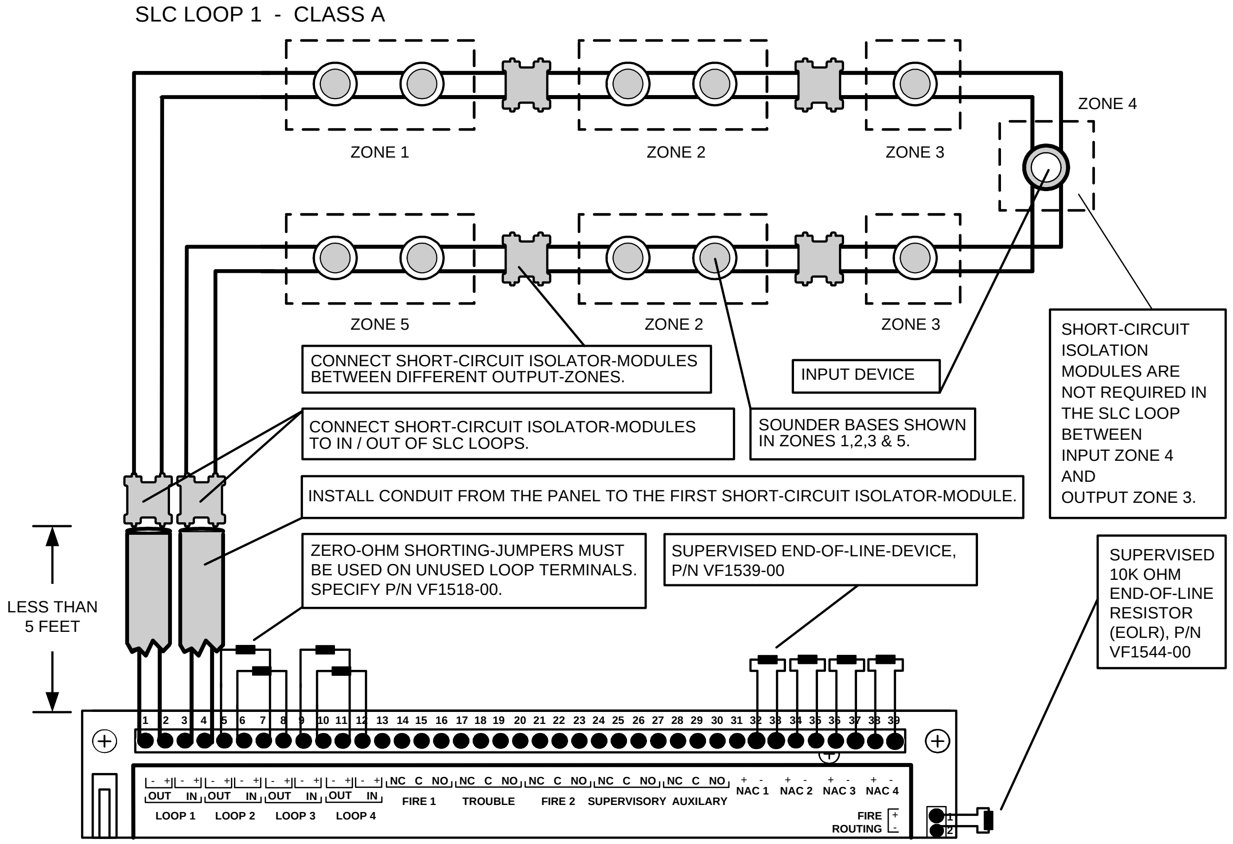
SLC LOOP 1 - CLASS A
ZONE 1
ZONE 2
ZONE 3
ZONE 4
ZONE 5
ZONE 2
ZONE 3
CONNECT SHORT-CIRCUIT ISOLATOR-MODULES BETWEEN DIFFERENT OUTPUT-ZONES.
INPUT DEVICE
SHORT-CIRCUIT ISOLATION MODULES ARE NOT REQUIRED IN THE SLC LOOP BETWEEN INPUT ZONE 4 AND OUTPUT ZONE 3.
CONNECT SHORT-CIRCUIT ISOLATOR-MODULES TO IN / OUT OF SLC LOOPS.
SOUNDER BASES SHOWN IN ZONES 1,2,3 & 5.
INSTALL CONDUIT FROM THE PANEL TO THE FIRST SHORT-CIRCUIT ISOLATOR-MODULE.
ZERO-OHM SHORTING-JUMPERS MUST BE USED ON UNUSED LOOP TERMINALS. SPECIFY P/N VF1518-00.
SUPERVISED END-OF-LINE-DEVICE, P/N VF1539-00
SUPERVISED 10K OHM END-OF-LINE RESISTOR (EOLR), P/N VF1544-00
LESS THAN 5 FEET
1 2 3 4 5 6 7 8 9 10 11 12 13 14 15 16 17 18 19 20 21 22 23 24 25 26 27 28 29 30 31 32 33 34 35 36 37 38 39
- + - + OUT IN LOOP 1
- + - + OUT IN LOOP 2
- + - + OUT IN LOOP 3
- + - + OUT IN LOOP 4
NC C NO FIRE 1
NC C NO TROUBLE
NC C NO FIRE 2
NC C NO SUPERVISORY
NC C NO AUXILARY
+ - NAC 1
+ - NAC 2
+ - NAC 3
+ - NAC 4
FIRE ROUTING + -
1 2

Section 51.4.3 of UL 864, 9th edition specifies that a single break, single ground, or wire-to-wire fault on the installation conductors of a signaling line circuit for use with addressable notification appliances or modules shall not affect operation of more than one notification zone.

Silencing Notification Appliances

Notification Appliance (NA) silencing on the Elite Panel meets exception 1, item 33.3.4. of UL 864, 9th edition. Individual NA zones can be re-sounded by addressable loops on the Elite Panel after receiving the global silence command for multiple NA zones.
Exception 1 states,“When a system is intended to provide signaling service to two or more physically separated buildings or zones, re-energizing of the notification appliance circuits only on a zone basis meets the intent of the requirement.”

Connecting NAC Devices

Connect Notification Appliances to NAC channels 1 through 4 of terminal-strip X1. NAC channels 1 through 4 are supervised and are provided on terminals 32 through 39 of terminal-strip X1.
NAC channels 1 through 4 are authorized for use with UL listed Fire Protection Service Valves.

To install Notification Appliance Circuits (NACs) on the Elite Panel:

1. Connect Notification Appliances and End-Of-Line-Devices to the NAC channel.
2. Connect End-Of-Line-Devices to unused NAC channels.
3. Maintain the limit for maximum wire length of the circuit.

The figure below illustrates an example of Class B, Style Y Notification Appliances on NAC 1.

Figure 3-9
Connecting NAC Devices

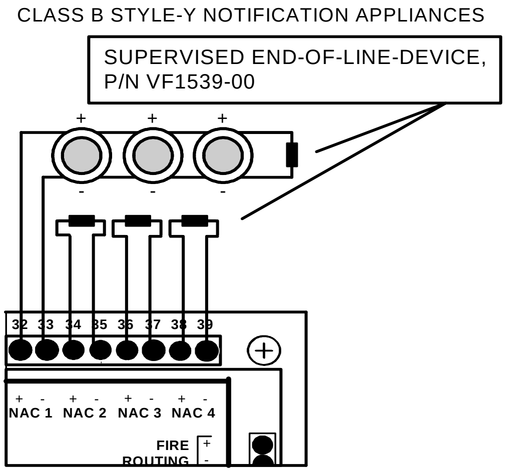
CLASS B STYLE-Y NOTIFICATION APPLIANCES
SUPERVISED END-OF-LINE-DEVICE, P/N VF1539-00
+
+
+
-
-
-
32 33 34 35 36 37 38 39
+ - + - + - + -
NAC 1 NAC 2 NAC 3 NAC 4
FIRE ROUTING
+
-

Synchronized device connections to the Elite Panel require special conditions when installing audible and visual Notification Appliances:

Audible Devices	The installation of synchronized-audible Notification Appliances on one NAC output shall not be installed in hearing range of another group of synchronized-audible Notification Appliances on another NAC output.
Visual Devices	The installation of synchronized-visual notification appliances on one NAC output shall not be installed in line-of-sight of another group of synchronized-visual Notification Appliances on another NAC output.

Reference Appendix B “Equipment List” for synchronization devices that are UL listed and authorized for use with the Elite Panel.

Connecting Output Devices

The Elite Panel provides connections for output devices on Fire Routing, Trouble Routing, Programmable Output and Aux 24V. Connect only compatible devices to these Elite Panel outputs.
Fire Routing, Trouble Routing and Programmable Output are supervised and special application outputs. These outputs are common, zonal and programmable.
The Elite Panel also provides relay contacts for operating output devices. Relay contacts are provided on terminal strip X1 for Fire 1, Trouble, Fire 2, Supervisory and Auxiliary.

Fire Routing and Trouble Routing

Fire Routing and Trouble Routing outputs are monitored for open and short-circuit fault conditions when using 10K End Of Line Resistors (EOLRs). Fire Routing and Trouble Routing outputs are protected by 500mA self-resetting-fuses. Connect polarized circuits to these voltage reversing outputs on terminals 1 through 4 of terminal-strip X2.

Configure these outputs using the Elite front-panel-display. Set configurations to operate and supervise devices connected to these outputs.

Provide cabling connections to these outputs using:

- 3 volt maximum line loss
- 18 AWG or 16 AWG copper cabling
- 850 Ft. maximum for 18 AWG
- 1400 Ft. maximum for 16 AWG

The figure below illustrates an example of a Fire Routing output containing a relay circuit:

Figure 3-10
Fire Routing and Trouble Routing

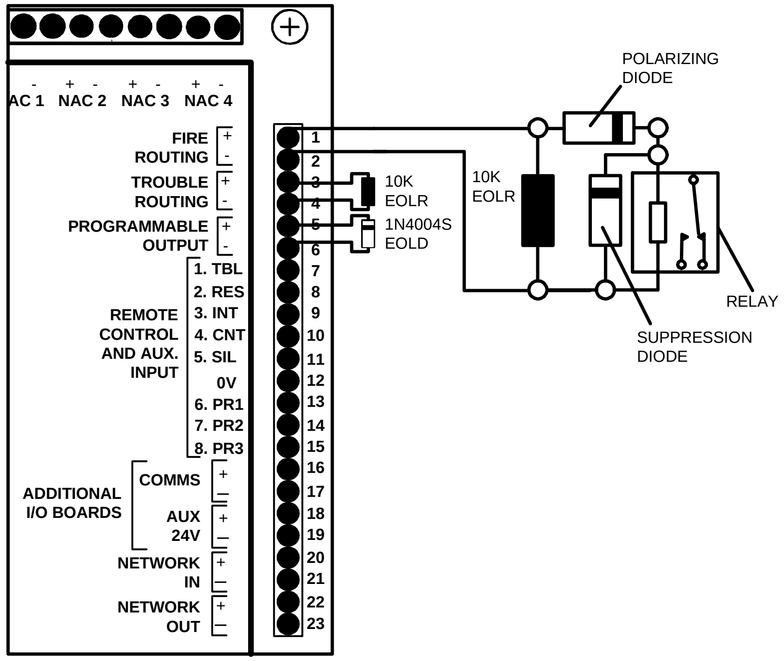
- + - + - + -
AC 1 NAC 2 NAC 3 NAC 4
FIRE ROUTING + -
TROUBLE ROUTING + -
PROGRAMMABLE OUTPUT + -
REMOTE CONTROL AND AUX. INPUT
1. TBL
2. RES
3. INT
4. CNT
5. SIL
0V
6. PR1
7. PR2
8. PR3
ADDITIONAL I/O BOARDS
COMMS + –
AUX 24V + –
NETWORK IN + –
NETWORK OUT + –
1
2
3
4
5
6
7
8
9
10
11
12
13
14
15
16
17
18
19
20
21
22
23
10K EOLR
1N4004S EOLD
10K EOLR
POLARIZING DIODE
RELAY
SUPPRESSION DIODE

Programmable Output

The Programmable Output can be configured using the front-panel-display of the Elite Panel.
The Programmable Output does not operate when it is not configured.

The Programmable Output is protected by a 1.1 Amp self-resetting fuse.
Connect polarized and suppressed circuits to this voltage reversing output on terminals 5 and 6 of terminal-strip X2.

Configure these outputs using the Elite front-panel-display. Set configurations to operate and supervise devices connected to these outputs. *The Programmable Output is programmable and a Special Application Output.*

Provide cabling connections to these outputs using:

- 3 volt maximum line loss
- 18 AWG or 16 AWG copper cabling
- 850 Ft. maximum for 18 AWG
- 1400 Ft. maximum for 16 AWG

Reference Appendix B, “Equipment List” for a list of devices authorized for this output.
The figure below illustrates an example of a Fire Protection Service Valve on the Programmable Output:

Figure 3-11
Programmable Output

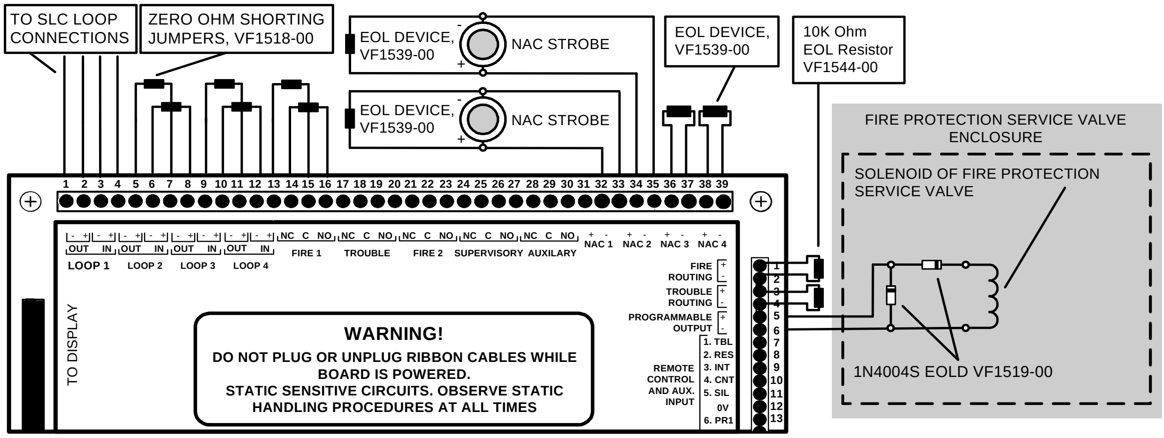
TO SLC LOOP CONNECTIONS
ZERO OHM SHORTING JUMPERS, VF1518-00
EOL DEVICE, VF1539-00
NAC STROBE
EOL DEVICE, VF1539-00
NAC STROBE
EOL DEVICE, VF1539-00
10K Ohm EOL Resistor VF1544-00
FIRE PROTECTION SERVICE VALVE ENCLOSURE
SOLENOID OF FIRE PROTECTION SERVICE VALVE
1N4004S EOLD VF1519-00
1 2 3 4 5 6 7 8 9 10 11 12 13 14 15 16 17 18 19 20 21 22 23 24 25 26 27 28 29 30 31 32 33 34 35 36 37 38 39
OUT IN OUT IN OUT IN OUT IN
LOOP 1 LOOP 2 LOOP 3 LOOP 4
NC C NO FIRE 1
NC C NO TROUBLE
NC C NO FIRE 2
NC C NO SUPERVISORY
NC C NO AUXILARY
NAC 1 NAC 2 NAC 3 NAC 4
TO DISPLAY
WARNING!
DO NOT PLUG OR UNPLUG RIBBON CABLES WHILE BOARD IS POWERED.
STATIC SENSITIVE CIRCUITS. OBSERVE STATIC HANDLING PROCEDURES AT ALL TIMES
FIRE ROUTING
TROUBLE ROUTING
PROGRAMMABLE OUTPUT
REMOTE CONTROL AND AUX. INPUT
1. TBL
2. RES
3. INT
4. CNT
5. SIL
0V
6. PR1
1 2 3 4 5 6 7 8 9 10 11 12 13

Auxiliary 24 VDC

The Auxiliary 24 VDC power-source can be used to operate expansion-boards or low-current auxiliary-devices. Devices connected to this output must not draw current in excess of 500 mA. Connect circuits to this 24 VDC output on terminals 18 and 19 of terminal-strip X2. The Auxiliary 24 VDC output is authorized for use with UL listed Fire Protection Service Valves. The Auxiliary 24 DC power-source does not provide a polarized output for monitoring. This output cannot be configured through the Elite front-panel-display.

The AUX 24 VDC connection is a Common Output. It provides a Special Application Output to solenoid devices and a regulated output to all other devices.
Provide cabling connections to these outputs using:

- 3 volt maximum line loss
- 18 AWG or 16 AWG copper cabling
- 850 Ft. maximum for 18 AWG
- 1400 Ft. maximum for 16 AWG

Reference Appendix B, “Equipment List” for the list of devices authorized for this output.

Relay Contacts

Relay contacts are located on terminal strip X1 of the Elite Panel and include:

Fire 1	This relay provides normally closed and normally open contact-actuation during fire conditions as a default operation.
Trouble	This relay provides normally closed and normally open contact-actuation during trouble conditions as a default operation.
Fire 2	This relay provides normally closed and normally open contact-actuation during fire conditions as a default operation.
Supervisory	This relay provides normally closed and normally open contact-actuation during supervisory conditions.This relay is not programmable.
Auxiliary	This relay provides normally closed and normally open contact-actuation during auxiliary conditions as a default operation.

The figure below illustrates an example circuit using the normally-open contacts of the trouble relay:

Figure 3-12
Trouble Relay Example

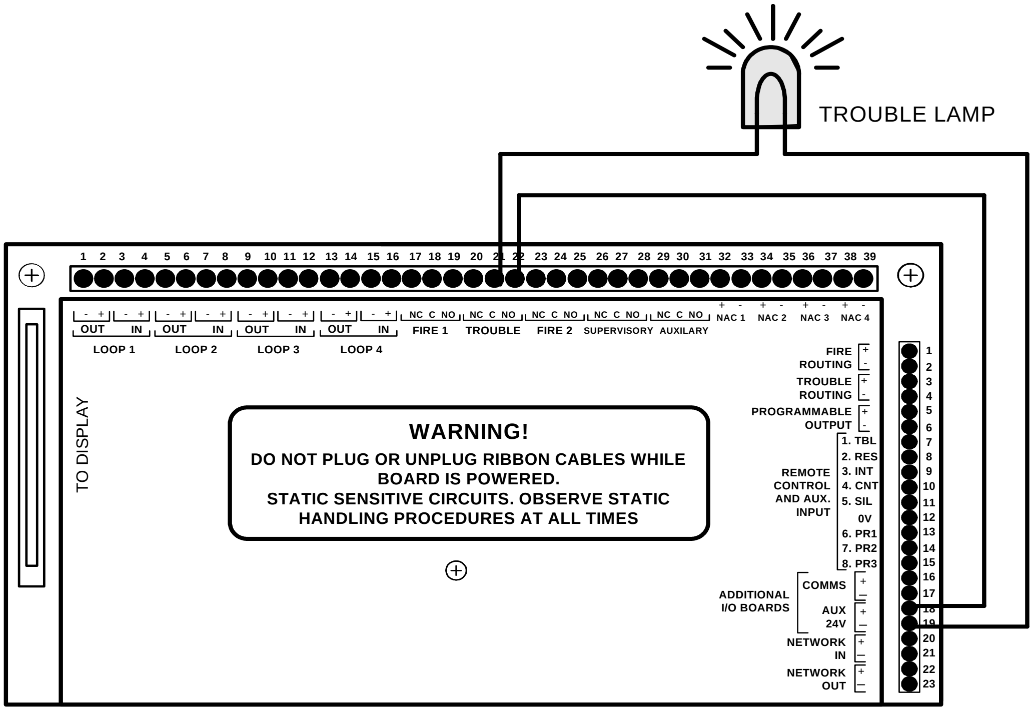
TROUBLE LAMP
1 2 3 4 5 6 7 8 9 10 11 12 13 14 15 16 17 18 19 20 21 22 23 24 25 26 27 28 29 30 31 32 33 34 35 36 37 38 39
- + - + OUT IN LOOP 1
- + - + OUT IN LOOP 2
- + - + OUT IN LOOP 3
- + - + OUT IN LOOP 4
NC C NO FIRE 1
NC C NO TROUBLE
NC C NO FIRE 2
NC C NO SUPERVISORY
NC C NO AUXILARY
+ - NAC 1
+ - NAC 2
+ - NAC 3
+ - NAC 4
TO DISPLAY
WARNING!
DO NOT PLUG OR UNPLUG RIBBON CABLES WHILE BOARD IS POWERED.
STATIC SENSITIVE CIRCUITS. OBSERVE STATIC HANDLING PROCEDURES AT ALL TIMES
FIRE ROUTING + -
TROUBLE ROUTING + -
PROGRAMMABLE OUTPUT + -
REMOTE CONTROL AND AUX. INPUT
1. TBL
2. RES
3. INT
4. CNT
5. SIL
0V
6. PR1
7. PR2
8. PR3
ADDITIONAL I/O BOARDS
COMMS + –
AUX 24V + –
NETWORK IN + –
NETWORK OUT + –
1 2 3 4 5 6 7 8 9 10 11 12 13 14 15 16 17 18 19 20 21 22 23

The figure above illustrates a trouble-condition caused by the absence of end-of-line resistors and end-of-line-devices on terminals of the Elite Panel.

Connecting Remote Control And Aux. Inputs

The table below describes default settings for unsupervised inputs on terminal-strip X1:

Terminal Designation	Operation	Description Of Default Operating Condition
1. TBL	Trouble	Provides a trouble input on the Elite Panel.
2. RES	Reset	Provides a reset input on the Elite Panel.
3. INT	Auxiliary	Provides an auxiliary input on the Elite Panel.
4. CNT	Emergency	Provides an emergency input on the Elite Panel.
5. SIL	Silence	Provides a silence input on the Elite Panel.
0V	Common	Completes the circuit path for trouble, reset, auxiliary, continuous, silence, programmable input 1, programmable input 2 and programmable input 3.
6. PR1	Programmable Input 1	Provides a transparent input on the Elite Panel.
7. PR2	Programmable Input 2	Provides a transparent input on the Elite Panel.
8. PR3	Programmable Input 3	Provides a transparent input on the Elite Panel.

These inputs and outputs are non-supervised and should not be used for life safety functionality.

The figure below illustrates an example connection of a panel-reset on the Remote Control And Aux. Inputs:

Figure 3-13
Remote Control And Aux. Inputs

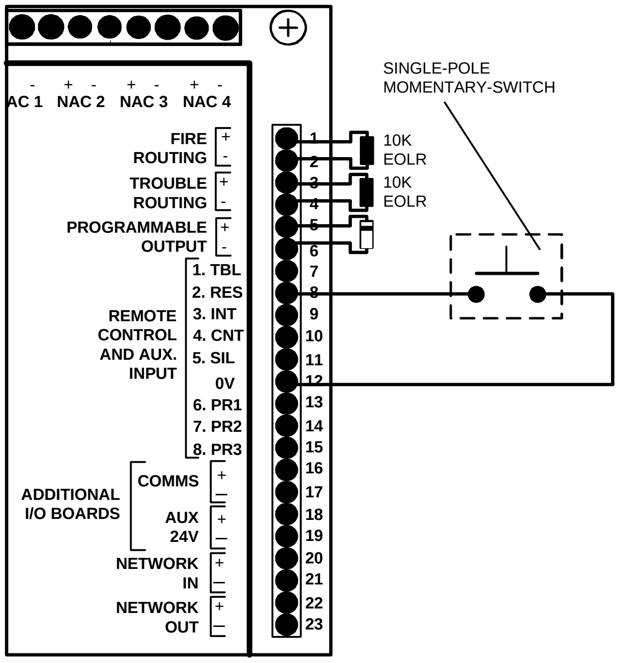
- + - + - + -
AC 1 NAC 2 NAC 3 NAC 4
FIRE ROUTING + -
TROUBLE ROUTING + -
PROGRAMMABLE OUTPUT + -
REMOTE CONTROL AND AUX. INPUT
1. TBL
2. RES
3. INT
4. CNT
5. SIL
0V
6. PR1
7. PR2
8. PR3
ADDITIONAL I/O BOARDS
COMMS + –
AUX 24V + –
NETWORK IN + –
NETWORK OUT + –
1
2
3
4
5
6
7
8
9
10
11
12
13
14
15
16
17
18
19
20
21
22
23
SINGLE-POLE MOMENTARY-SWITCH
10K EOLR
10K EOLR

Mounting the Elite Panel

Select a mounting location that provides adequate room for opening the door of the Elite Panel. Provide a minimum of 1” clearance beyond the door-edge when anchoring the Elite Panel. The figure below illustrates the door clearance requirement:

Figure 3-16
Door Clearance Requirements

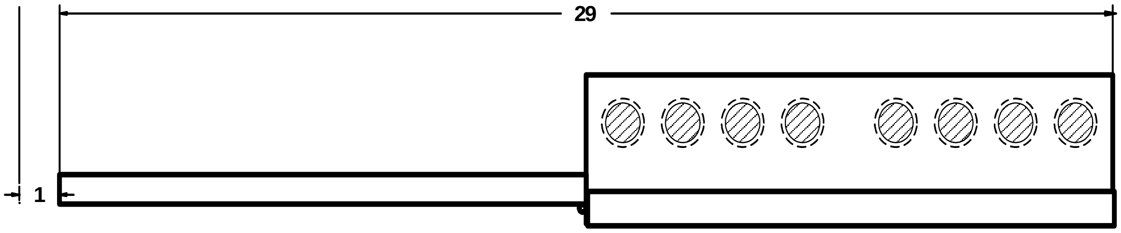

To mount the Elite Panel:

- Mark the Location
- Prepare for Mounting
- Anchor the Elite Panel
- Wire AC Power and TELCO
- Provide Final Connections
- Test the Installation

Marking the Location

Mark hole locations on the premises-wall for mounting the Elite Panel. The figure below illustrates the hole marking requirements:

Figure 3-17
Hole Marking Requirements

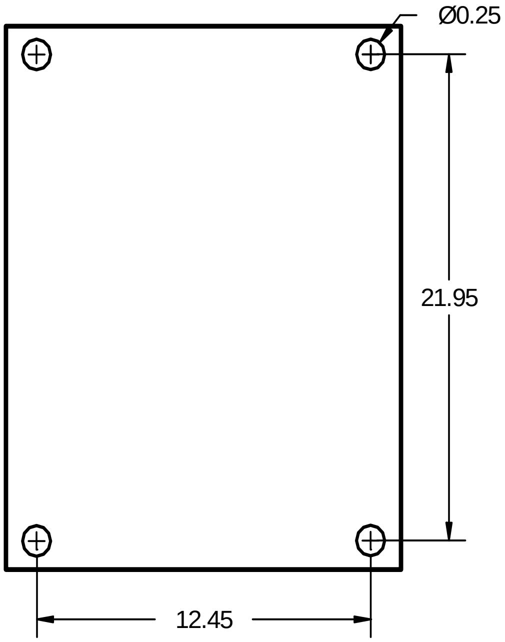

Preparing for Mounting

To prepare the Elite Panel for mounting:

1 Remove the ground lug, DC power and serial-cable from the Panel Annunciator Board.

The figure below illustrates removing cables from the cabinet of the Elite Panel.

Figure 3-18
Removing the Cables

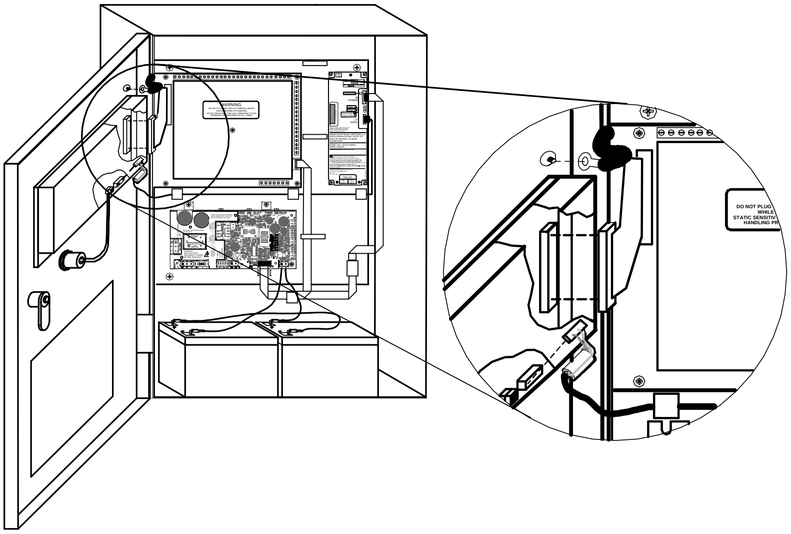

The style and placement of cable-ties in the illustrations are shown for reference only.

2 Remove the door from the Elite Panel.

The figure below illustrates removing the door from the Elite Panel:

Figure 3-19
Removing the Door

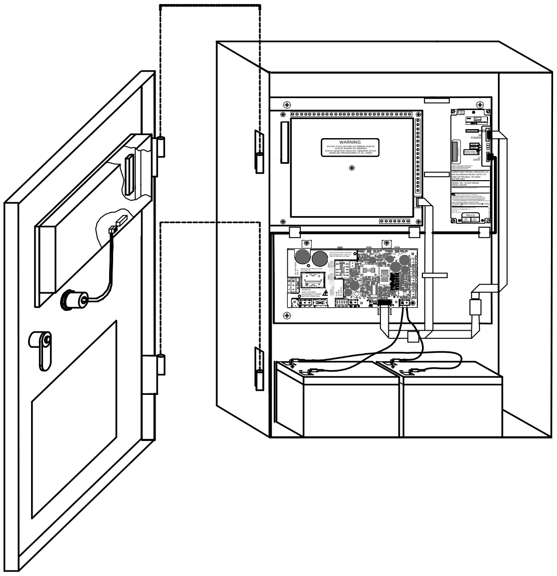

3 Remove DC power and serial-cable connectors from optional features such as the Modem-DACT Ethernet, Media Gateway and NIC.

The figure below illustrates removing cable connections from this circuit board:

Figure 3-20
Removing Power and serial-cables

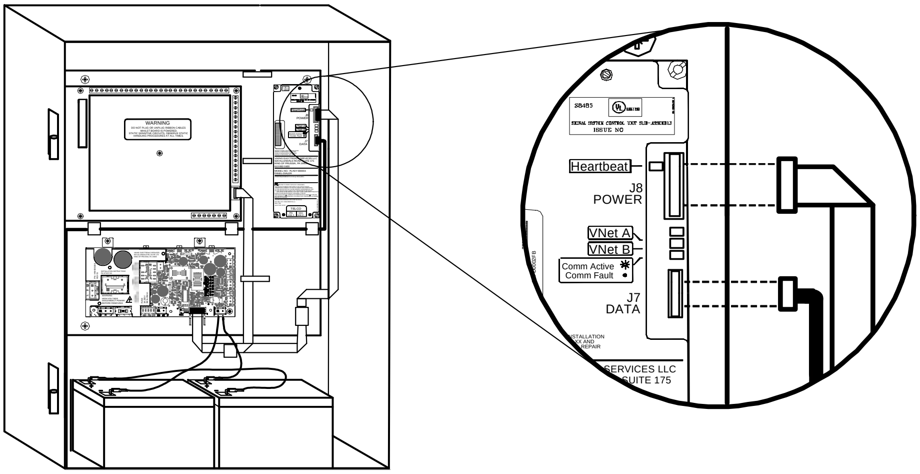
WARNING
SB485
SIGNAL SYSTEM CONTROL UNIT SUB-ASSEMBLY
ISSUE NO
Heartbeat
J8
POWER
VNet A
VNet B
Comm Active
Comm Fault
J7
DATA
SERVICES LLC
SUITE 175

The step described above is not required on the "No Communication" model of the Elite Panel.

4 Remove the cable-ties holding the AC power-cable to the back-plate of the Elite Panel.

5 Remove the cable-ties holding the DC power-cable to the back-plate of the Elite Panel.

6 Remove the connector of the DC power-cable from the 4 Amp OEM 1 Power Supply.

7 Remove the connector of the DC power-cable from the Control Unit Board.

The figure below illustrates removing cables ties and the power-cable connections:

Figure 3-21
Removing Cable Connections

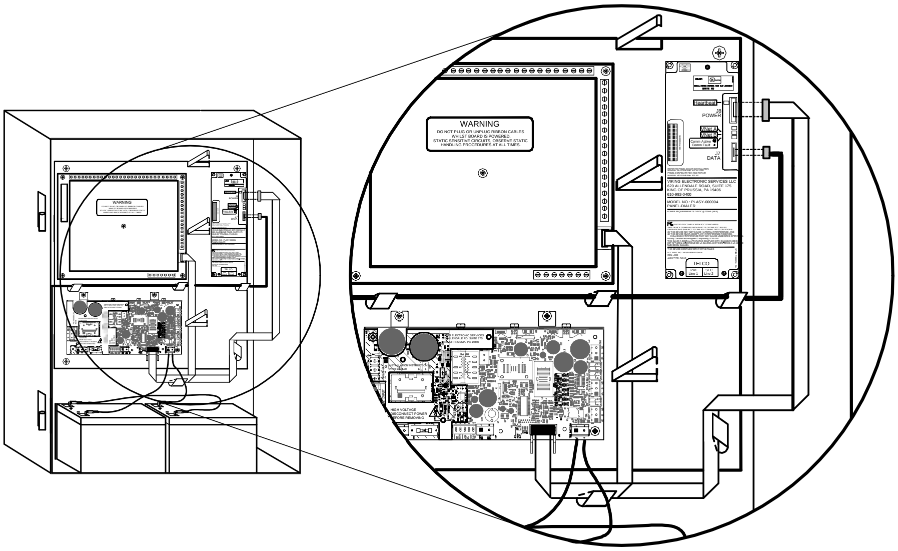
WARNING
DO NOT PLUG OR UNPLUG RIBBON CABLES WHILST BOARD IS POWERED.
STATIC SENSITIVE CIRCUITS, OBSERVE STATIC HANDLING PROCEDURES AT ALL TIMES.
Heartbeat
POWER
DATA
TELCO

8 Remove the DC power-cable from the Elite Panel.

The figure below illustrates removing the power-cable from the Elite Panel:

Figure 3-22
Removing the Power-Cable

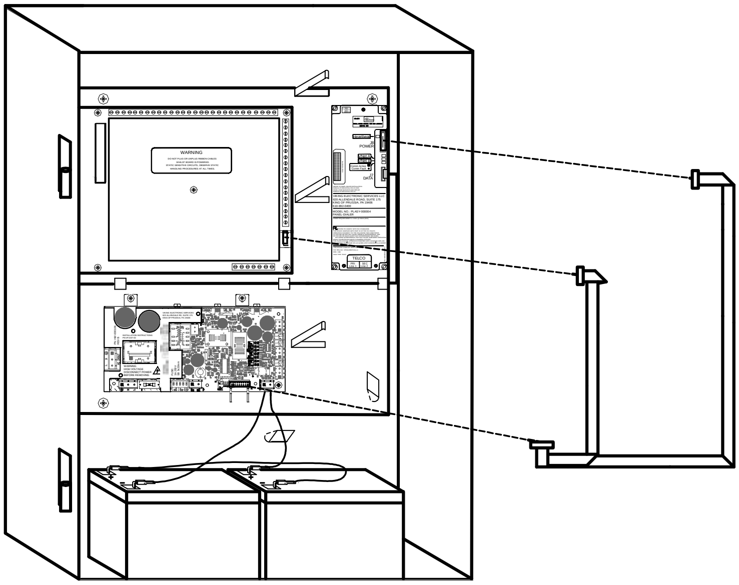

The DC power-cable provided on the "No Communication" model of the Elite Panel contains two 14 pin IDC connectors.

9 Remove the cables connecting the batteries to the Elite Panel.

The figure below illustrates removing cables from the batteries of the Elite Panel:

Figure 3-23
Removing Battery Cables

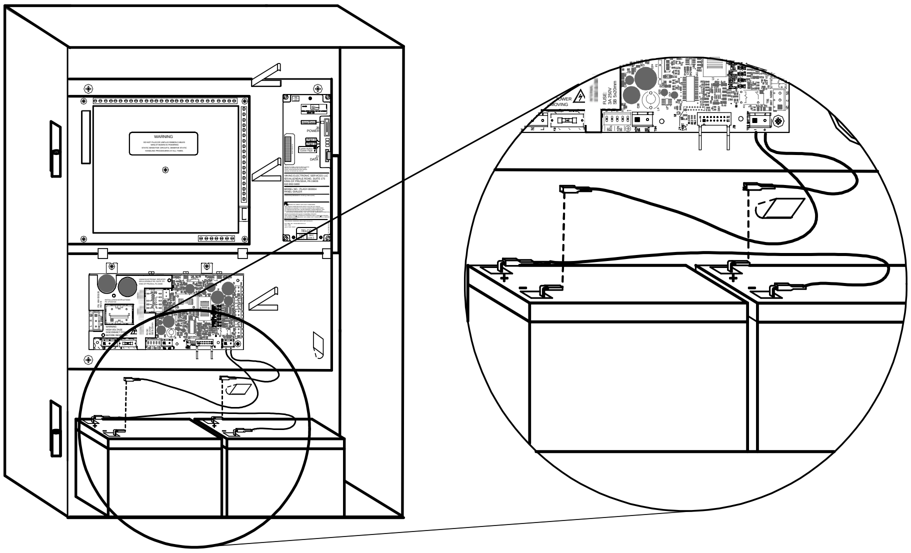

10 Remove the batteries from the Elite Panel.

The figure below illustrates removing the batteries from the cabinet of the Elite Panel:

Figure 3-24
Removing Battery Cables

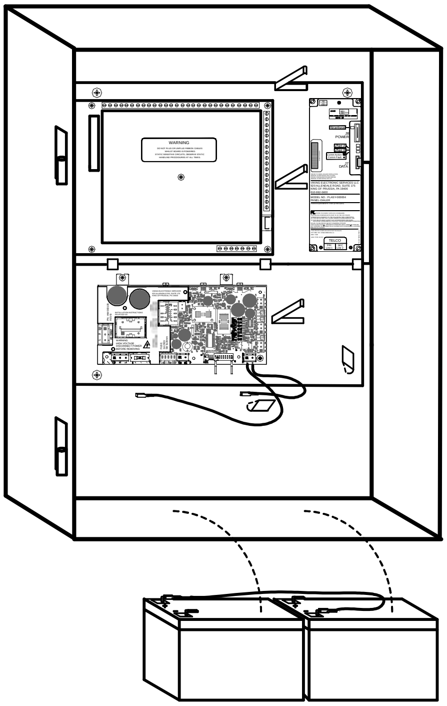

11 Remove the ground-wire from the retaining-bolt at the lower-left-side of the Elite cabinet.

The figure below illustrates removing the ground-wire from the retaining-bolt:

Figure 3-25
Removing the Ground-Wire

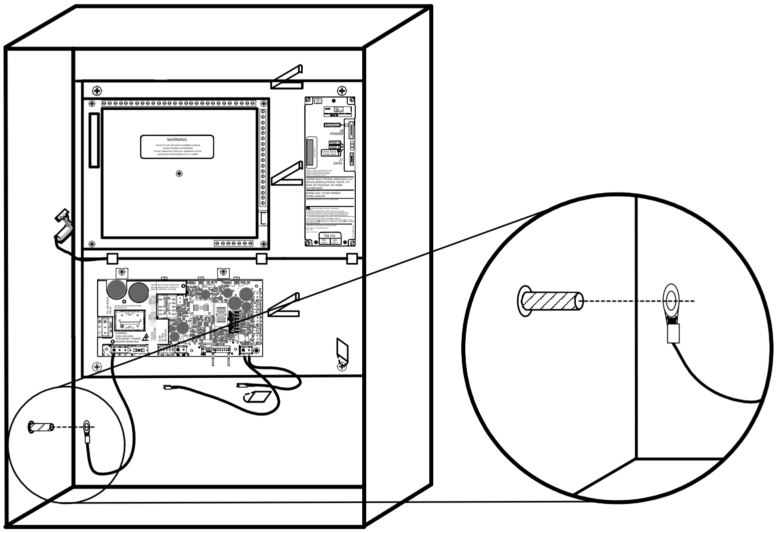

12 Remove the back-plate from inside the Elite Panel.

The figure below illustrates removing the back-plate from the Elite Panel:

Figure 3-26
Removing the Back-Plate

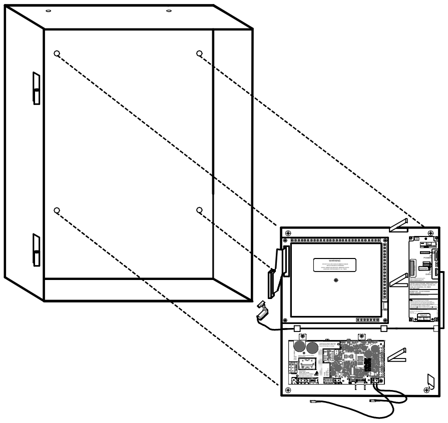

Anchoring the Elite Panel

Drill holes in the premises-wall for anchoring the Elite Panel and then anchor the empty cabinet to the wall using the mounting hardware to secure it.

Wiring AC Power and TELCO

1 Remove the top-left and top-right knockout tabs from the cabinet.

The figure below illustrates removing knockout tabs:

Figure 3-27
Removing Knockout Tabs

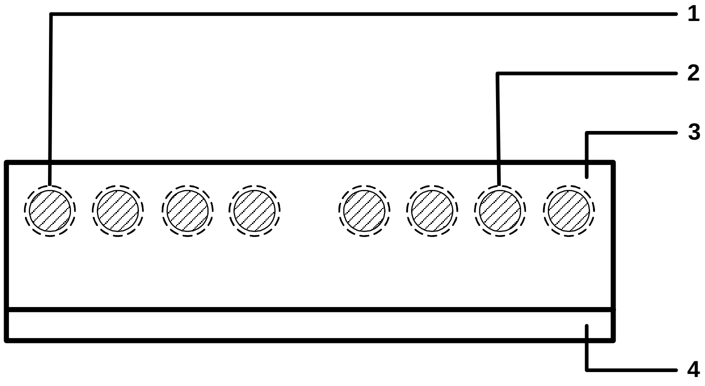

Key	Description
1	Remove this tab to feed the AC power-cable.
2	Remove this tab to feed the TELCO cable.
3	Top-rear of the Elite Panel.
4	Top-front of the Elite Panel. Front-panel door flange shown.

CAUTION!

Avoid routing SLC cabling through the same conduit as 120 VAC lines.

2 Thread the AC power-cable into the top-left-hole provided from the knockout-tab.

3 Thread the TELCO cable into the top-right-hole provided from the knockout-tab.

4 Replace the Elite Panel back-plate.
Refer to Section 3, "Preparing for Mounting".

5 Replace the Elite Panel door.
Refer to Section 3, "Preparing for Mounting".

6 Secure a ground-wire from the ground-lug on the top-left-side of the Elite Panel cabinet to the ground-lug on the inside of the Elite Panel door.

The figure below illustrates the ground-wire connection on the cabinet door:

Figure 3-28
Ground wire connection

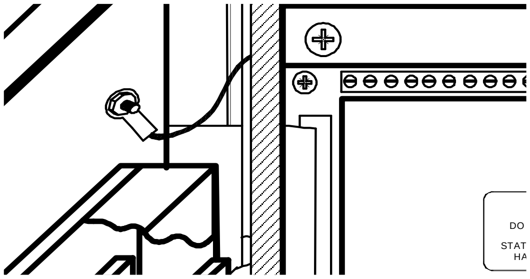

7 Secure a ground-wire from TB6, terminal 1 of the 4 Amp OEM 1 Power Supply to the ground-lug on the bottom-left-side of the Elite Panel cabinet.

The figure below illustrates securing the ground-wire connection on the cabinet door:

Figure 3-29
Securing the ground wire connection

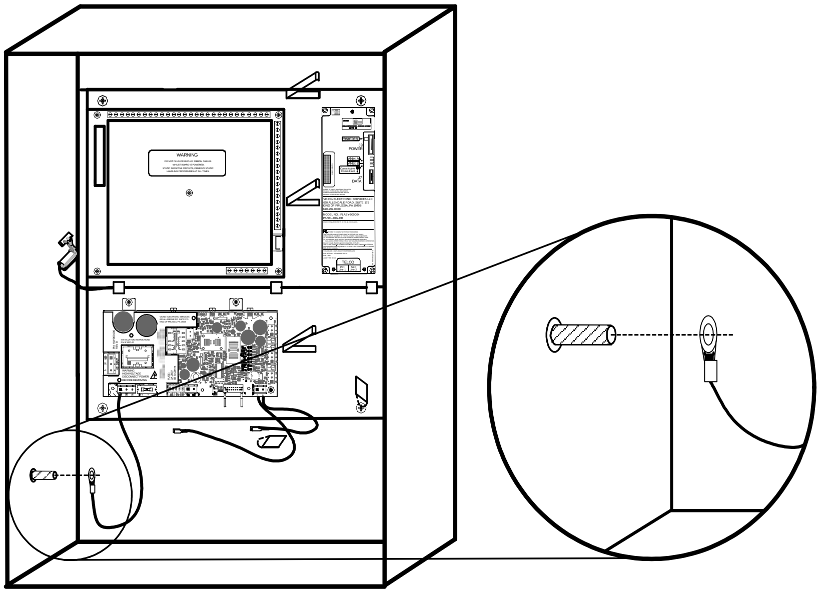

8 Connect cabling for serial data, TELCO and DC power.

Refer to installation manuals for the Media Gateway, NIC and Modem-DACT Ethernet when connecting cabling for these features. *The "No Communication" option of the Elite Panel does not include the TELCO connections provided in models of the Media Gateway, NIC and Modem-DACT Ethernet.*

9 Connect initiating devices, notification appliances and signalling circuits.
Refer to the "Elite Panel Configuration and Repair Manual".

10 Secure the remaining cables inside the Elite Panel cabinet.

The figure below illustrates securing and dressing the cables inside the Elite Panel:

Figure 3-30
Securing and Dressing Cables

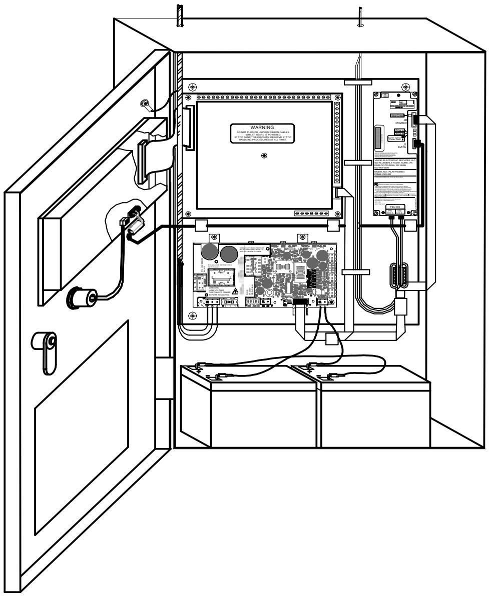

Testing the Installation

Perform the following before testing the Elite Panel:

1 Disconnect loops, sounder circuits, hard I/Os, inputs and outputs from the panel.

2 Confirm that correct connections exist between the batteries and the 4 Amp OEM 1 Power Supply.

3 Apply AC power to the Elite Panel.

4 Verify that the panel display illuminates.

5 Confirm Auto Learn and Logon.

CAUTION!

The Elite Panel buzzer may activate following AUTO LEARN. This buzzer activation indicates that an installation error condition exists. Disable the buzzer after determining the cause of the alarm and then fix the installation problem.

6 Test the Elite Panel lamps.

7 Verify polarity and then connect the batteries to the panel.

8 Verify polarity and then connect the loops, sounder circuits, hard I/Os, inputs and outputs to the panel.

Confirming a Successful Installation

The Elite Panel installation is successful when it completes the following sequence of front-panel displays:

1	Panel Initialization	Tests internal hardware and firmware responsible for operating loop devices.
2	Loop Initialization	Configures the Elite Panel to existing loop conditions.
3	Normal-Standby	Displays the Main Menu after a successful boot process.

The front-panel displays shown are intended for reference only.

Panel initialization

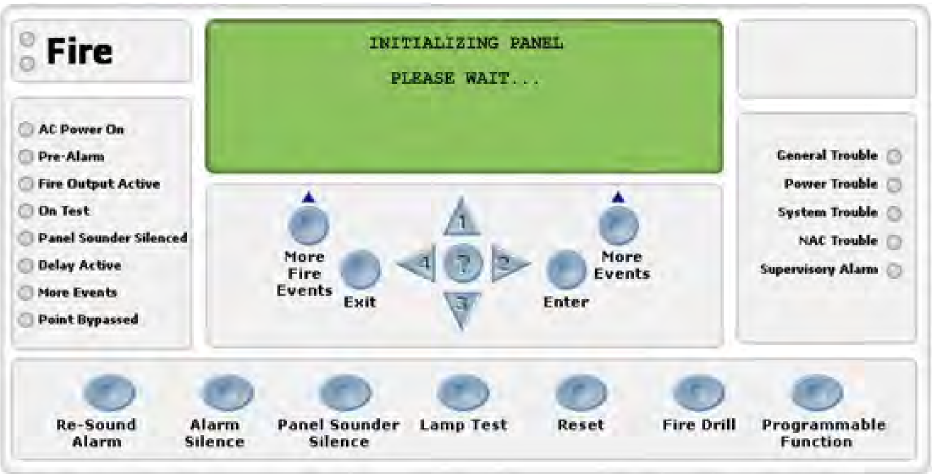

```
INITIALIZING PANEL
PLEASE WAIT...
```

Fire
AC Power On
Pre-Alarm
Fire Output Active
On Test
Panel Sounder Silenced
Delay Active
More Events
Point Bypassed
More Fire Events
Exit
Enter
More Events
1
2
3
4
?
General Trouble
Power Trouble
System Trouble
NAC Trouble
Supervisory Alarm
Re-Sound Alarm
Alarm Silence
Panel Sounder Silence
Lamp Test
Reset
Fire Drill
Programmable Function

Loop initialization

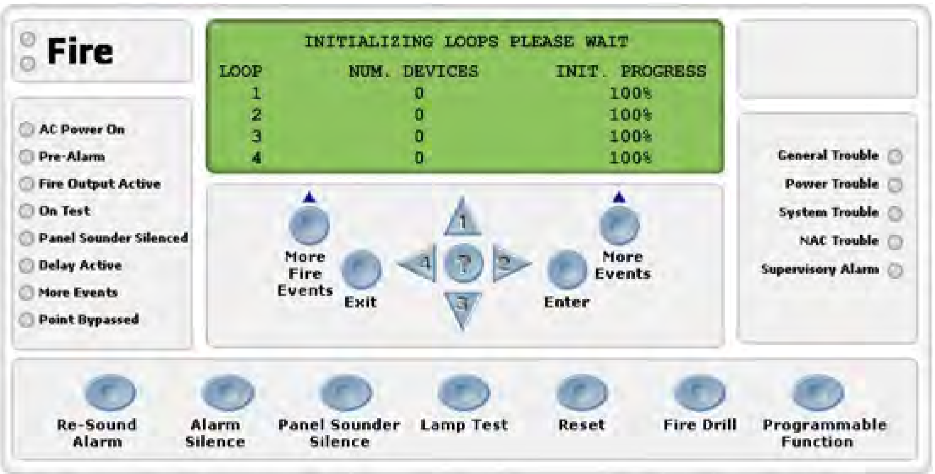

```
         INITIALIZING LOOPS PLEASE WAIT
LOOP         NUM. DEVICES         INIT. PROGRESS
  1               0                    100%
  2               0                    100%
  3               0                    100%
  4               0                    100%
```

Fire
AC Power On
Pre-Alarm
Fire Output Active
On Test
Panel Sounder Silenced
Delay Active
More Events
Point Bypassed
More Fire Events
Exit
Enter
More Events
1
2
3
4
?
General Trouble
Power Trouble
System Trouble
NAC Trouble
Supervisory Alarm
Re-Sound Alarm
Alarm Silence
Panel Sounder Silence
Lamp Test
Reset
Fire Drill
Programmable Function

Normal-Standby

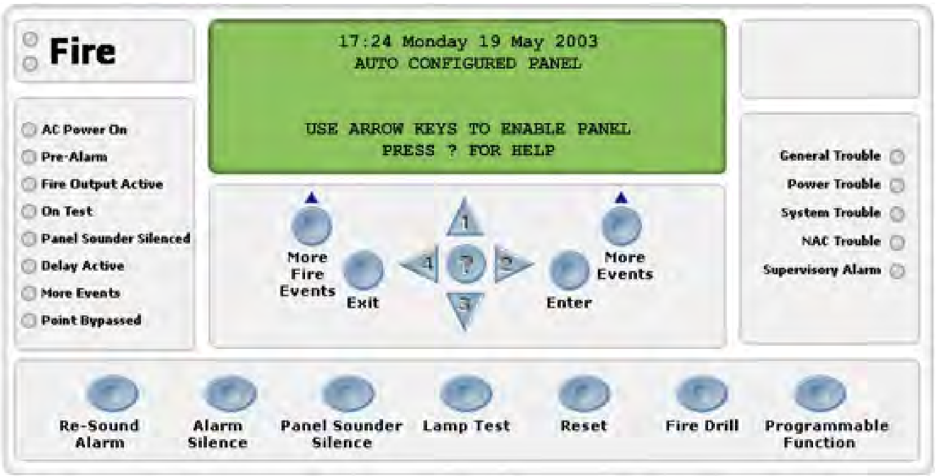

17:24 Monday 19 May 2003
AUTO CONFIGURED PANEL

USE ARROW KEYS TO ENABLE PANEL
PRESS ? FOR HELP

Fire
AC Power On
Pre-Alarm
Fire Output Active
On Test
Panel Sounder Silenced
Delay Active
More Events
Point Bypassed
More Fire Events
Exit
1
4
?
2
3
Enter
More Events
General Trouble
Power Trouble
System Trouble
NAC Trouble
Supervisory Alarm
Re-Sound Alarm
Alarm Silence
Panel Sounder Silence
Lamp Test
Reset
Fire Drill
Programmable Function

Initializations performed during the booting process are complete when the Main Menu display appears. Display of the Main Menu indicates that the Elite Panel is operating properly and that the installation was successful.
This is the Normal Standby condition of the Elite Panel.

Testing the Panel Lamps

1 Press the lamp test button to light the front-panel lamps.

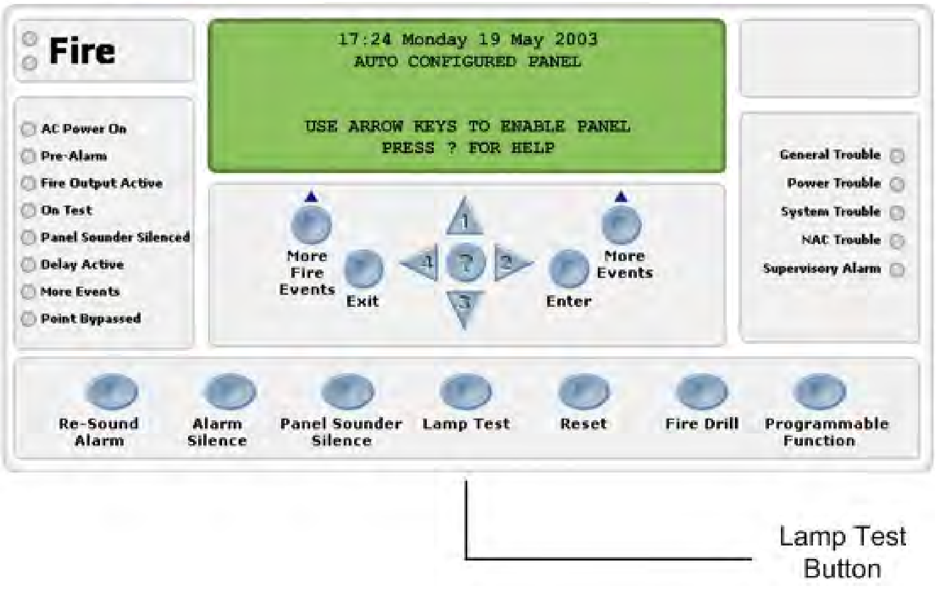

17:24 Monday 19 May 2003
AUTO CONFIGURED PANEL

USE ARROW KEYS TO ENABLE PANEL
PRESS ? FOR HELP

Fire
AC Power On
Pre-Alarm
Fire Output Active
On Test
Panel Sounder Silenced
Delay Active
More Events
Point Bypassed
More Fire Events
Exit
1
4
?
2
3
Enter
More Events
General Trouble
Power Trouble
System Trouble
NAC Trouble
Supervisory Alarm
Re-Sound Alarm
Alarm Silence
Panel Sounder Silence
Lamp Test
Reset
Fire Drill
Programmable Function
Lamp Test Button

2 Verify that all front-panel lamps are lit.

Contact the help desk if front-panel lamps do not light.
Reference Section 2, "Overview" for a description of Lamp Test operation.

Trouble-Silence Test

This test confirms the silencing operation of the Elite Panel during a trouble condition.
To perform the Trouble-Silence Test:

1 Confirm that the Elite Panel is in the Normal-Standby mode before performing this test.

The Normal-Standby mode is shown below:

```
         17:24 Monday 19 May 2003
          AUTO CONFIGURED PANEL


      USE ARROW KEYS TO ENABLE PANEL
             PRESS ? FOR HELP
```

The first line of the message format contains the time, day and date.
The second line of the format contains a default or user defined message.

2 Remove the black-lead from the negative terminal of the standby-battery in the Elite Panel.

The following conditions occur on the front-panel of the Elite Panel:

- The General Trouble LED flashes yellow.
- The Power Trouble LED flashes yellow.
- The internal sounder annunciates.
- The LCD display provides the following message to identify this condition:

```
ALM=000  TBL=0002  SUP=000  OOS=000  REL=00
                * TROUBLE *
NODE=1 PANEL NAME
Low battery voltage
                                More Events
```

In the example display above the trouble condition is identified by * TROUBLE * and “TBL=0002”. TBL=0002 indicates that two trouble conditions exist. The first trouble condition, “Low battery voltage” is displayed above. The second trouble condition, “battery disconnected” is displayed in the MORE EVENTS menu.

3 Identify the second trouble condition on the Elite Panel.

To display the second trouble condition on the Elite Panel:

1 Press More Events on the front-panel of the Elite.
2 Press 3 on the central-key-pad to scroll down to “MORE TROUBLE”.
3 Press 2 on the central-key-pad to display “battery disconnected”.

```
              MORE TROUBLE 001/002
                  * TROUBLE *
NODE=1 PANEL NAME
Battery disconnected
Use UP/DOWN arrow keys to scroll events
```

4 Silence the sounder on the Elite Panel.

Press the Panel Sounder Silence button on the front-panel to silence the internal alarm of the Elite Panel. The following conditions occur on the front-panel of the Elite Panel:

- The General Trouble LED flashes yellow.
- The Power Trouble LED flashes yellow.
- The internal sounder does not annunciate.
- The LCD display provides the following message to identify this condition:

```
ALM=000  TBL=0002  SUP=000  OOS=000  REL=00
                * TROUBLE *
NODE=1 PANEL NAME
Low battery voltage
                                More Events
```

5 Re-connect the black-lead to the negative terminal of the standby-battery in the Elite Panel.

The LCD display provides the following message to identify the return to the normal-standby condition:

```
   17:24 Monday 19 May 2003
    AUTO CONFIGURED PANEL


USE ARROW KEYS TO ENABLE PANEL
       PRESS ? FOR HELP
```

Troubleshooting

This section describes how to troubleshoot using the 4 Amp OEM 1 Power Supply and the Front-Panel Menu.

4 Amp OEM 1 Power Supply

Troubleshoot the 4 Amp OEM 1 Power Supply when the Front-Panel Menu of the Elite Panel is not displaying messages after receiving power. The 4 Amp OEM 1 Power Supply performs self-testing during the powering process. Visually inspect the 4 Amp OEM 1 Power Supply to confirm that it is secure in the cabinet before beginning the test. Also inspect the cabling for secure terminations, proper dressing and lack of pinching.

Test the 4 Amp OEM 1 Power Supply to confirm that it's functioning correctly by inspecting its LEDs during the powering and operating process.

CAUTION!

> The 4 Amp OEM 1 Power Supply will not operate on battery power until primary power connections are complete. Connect primary power to the 4 Amp OEM 1 Power Supply before connecting the batteries.

Powering

Perform the following tests:

1. Confirm that connections are complete as described in the installation portion of this procedure.
2. Apply AC power to the input of the 4 Amp OEM 1 Power Supply.
3. Confirm that the following LED status conditions exist after the 4 Amp OEM 1 Power Supply receives power:
   - AC NORM - Green
   - HEART BEAT - Flashing Yellow
   - DC OUTON - Green
   - BAT LOW - This LED may turn on during the powering process to indicate a low battery voltage condition. This LED will turn off when the battery voltage is above the BAT LOW condition.
   - All other LEDs are off
4. Monitor the status LEDs for the fault conditions described below and follow the recommended action when the 4 Amp OEM 1 Power Supply does not provide the status indications described in step 3.

Status LEDs	Normal	Fault	Recommended Action for Fault Condition
AC NORM	Green	Off	Check fuse F2, source power and input wiring (TB6).
EARTH FAULT	Off	Yellow	Remove wiring from TB4. If fault clears check device wiring.
GENTBL CRGFLT	Off	Yellow	Check wiring integrity to the standby batteries. Replace the batteries. This LED condition can also be related to an internal fault on the 4 Amp OEM 1 Power Supply.
BAT LOW	Off	Yellow	Check the condition of the batteries. Battery voltage may be below 24 VDC. This LED condition may occur when batteries are low.
BAT DISCON	Off	Yellow	Check wiring integrity and polarity to the standby batteries.
HEART BEAT	Flashing Yellow	Not Flashing	Internal fault condition. Disconnect batteries and cycle the power input feeding the 4 Amp OEM 1 Power Supply at TB6.
DC OUTON	Green	Off	Check wiring at the DC output (TB4).

Contact VES if fault conditions cannot be resolved using the methods recommended.

Operating

Monitor LED performance while the Elite Panel is operating to determine the health of 4 Amp OEM 1 Power Supply. To monitor LED performance:

1. Complete the test described for powering.
2. Confirm that LED HRT (Heartbeat) is flashing.
3. Confirm that LEDs AC NORM and DC OUTON are lit continuously.
4. Confirm that all other LEDs are not lit.

Front-Panel Menu

Troubleshoot the Elite Panel when messages on the front-panel are not consistent with those described in “Confirming a Successful Installation”.

Options on the Front-Panel Menu include:

TEST ZONES	Tests zones 1 to 500 including local NACs, panel outputs and loop outputs.
EVENT LOG	Provides event log view function as well as an event log clear function.
LOOP DATA TEST	Tests devices connected to Elite Panel loops.

TEST ZONES

The TEST ZONES menu tests NAC, panel and loop outputs. Options for this menu feature are described below:

Test Zones	Default = 1	Sets the test for zones 1 to 500.
Local NACs	Default = On	Tests Elite Panel NACs. Audible and visual notification circuits activate for 3-second durations during this test.
Panel Outputs	Default = Off	Tests Elite Panel outputs other than NACs and includes Fire Routing, Trouble Routing and Programmable Output.
Loop Outputs	Default = Off	Tests loop driven outputs other than the loop sounders.

Refer to Section 4, “Front-Panel Menu” for more information about Test Zones.

Test Zones reverts to the MAIN MENU after 25 seconds when there is no navigation activity on the front-panel display.

To troubleshoot using the TEST ZONES menu feature:

1. Press 3 on the upper-control-pad to display the SET ACCESS LEVEL 2 MENU.

```
SET ACCESS LEVEL 2 MENU
Enter Access Level 2 Password
Use numbered arrow keys
*****
Access will automatically expire after
120 seconds if no key is pressed.
ENTER TO PROCECEED – EXIT TO QUIT
```

2 Type the five digit code in the password field and press Enter.
The default password is 22222.

3 Press 3 on the upper-control-pad to display the MAIN MENU.

```
      MAIN MENU – V3.60216LH
>DISABLEMENTS
 VIEW DEVICES
 TEST ZONES
 SET SYSTEM TIME
 SENSOR MAINTENANCE EARLY WARNING
 ACCESS LEVEL 3
```

4 Press 3 on the upper-control-pad to navigate down to TEST ZONES.

```
MAIN MENU – V3.60216LH
 DISABLEMENTS
 VIEW DEVICES
>TEST ZONES
 SET SYSTEM TIME
 SENSOR MAINTENANCE EARLY WARNING
 ACCESS LEVEL 3
```

5 Press 2 on the upper-control-pad to select TEST ZONES.

```
 TEST ZONES MENU
>TEST ZONE: 01 – (NORMAL)
 Use Up/Down arrow keys to select.
 Press > to proceed. Press < to go back.
```

6 Press 1 on the upper-control-pad to select a TEST ZONE from 1 to 500.

7 Press 2 on the upper-control-pad to select the TEST ZONE option for LOCAL NAC: - ON.

```
TEST ZONE: 1

>LOCAL NAC: - ON

 Use Up/Down arrow keys to select.
 Press > to proceed. Press < to go back.
```

8 Press 1 on the upper-control-pad to set LOCAL NAC: - OFF.

9 Press 2 on the upper-control-pad to select the TEST ZONE option for PANEL OUTPUTS: - OFF.

```
TEST ZONE: 1

>PANEL OUTPUTS: - OFF

 Use Up/Down arrow keys to select.
 Press > to proceed. Press < to go back.
```

10 Press 1 on the upper-control-pad to set PANEL OUTPUTS: - ON.

11 Press 2 on the upper-control-pad to select the TEST ZONE option for LOOP OUTPUTS: - OFF.

```
TEST ZONE: 1

>LOOP OUTPUTS: - OFF

 Use Up/Down arrow keys to select.
 Press > to proceed. Press < to go back.
```

12 Press 1 on the upper-control-pad to set LOOP OUTPUTS: - ON.

13 Press 2 on the upper-control-pad to display the test mode for the TEST ZONE:

```
START TEST MODE ?
TEST ZONE: 1
Test Mode will expire after 15 minutes if zone is idle.
Press ENTER to start Test Mode.
Press EXIT to quit.
Press < to go back.
```

14 Press ENTER on the upper-control-pad to begin the test or press EXIT to quit.
Test mode runs for 15 minutes.

During the test:

- The “On Test” LED illuminates continuously
- The More events LED illuminates continuously
- The General Trouble LED blinks.
- The internal buzzer sounds intermittently

The front-panel display provides the following message:

```
ZONES IN ALARM=000 TRBL=0001 DISAB=0000
      * TROUBLE *
NODE=1 AUTOLEARN
Test mode
      More Events
```

15 Press ENTER (again) to cancel the test.

Event Log

The Event Log menu can display the Elite Panel event log or clear it.
Any condition outside of normal operation of the system generates an entry into the event log. The event log can be used to troubleshoot system problems or verify that activities such as Fire Drills.
Refer to Section 4, “Front-Panel Menu” for more information about Event Log.

Displaying the Event Log

To display the Event Log:

1 Press 3 on the upper-control-pad to display the SET ACCESS LEVEL 2 MENU.

```
SET ACCESS LEVEL 2 MENU
Enter Access Level 2 Password
Use numbered arrow keys
*****
Access will automatically expire after
120 seconds if no key is pressed.
ENTER TO PROCECEED – EXIT TO QUIT
```

2 Type the five digit code in the password field and press Enter.
The default password is 22222.

3 Press 3 on the upper-control-pad to display the MAIN MENU.

```
 MAIN MENU – V3.60216LH
>DISABLEMENTS
 VIEW DEVICES
 TEST ZONES
 SET SYSTEM TIME
 SENSOR MAINTENANCE EARLY WARNING
 ACCESS LEVEL 3
```

4 Press 1 on the upper-control-pad to navigate to ACCESS LEVEL 3.

```
 MAIN MENU – V3.60216LH
 DISABLEMENTS
 VIEW DEVICES
 TEST ZONES
 SET SYSTEM TIME
 SENSOR MAINTENANCE EARLY WARNING
>ACCESS LEVEL 3
```

5 Press 2 on the upper-control-pad to display the SET ACCESS LEVEL 3 MENU:

```
SET ACCESS LEVEL 3 MENU
Enter Access Level 3 Password
Use numbered arrow keys
*****
ENTER TO PROCEED – EXIT TO QUIT
```

6 Type the five digit code in the password field and press Enter.
The default password is 33333.

```
ACCESS LEVEL 3 MENU
>EDIT CONFIGURATION
 SET TIMES
 EVENT LOG
 SYSTEM DISABLEMENTS
 LOOP  DATA TEST
```

7 Press 3 on the upper-control-pad and navigate to EVENT LOG.

```
 ACCESS LEVEL 3 MENU
 EDIT CONFIGURATION
 SET TIMES
>EVENT LOG
 SYSTEM DISABLEMENTS
 LOOP  DATA TEST
```

8 Press 2 on the upper-control-pad to display the VIEW/CLEAR EVENT LOG MENU.

```
     VIEW/CLEAR EVENT LOG MENU
>View Event Log
 Clear Event Log
```

9 Press 2 on the upper-control-pad to display the View Event Log.

```
SELECT EVENT TYPES TO VIEW
>FIRE- 0
 PRE-ALARM- 1
 TROUBLE- 0
 DISABLEMENT- 0
 OTHER EVENTS- 0
 ALL EVENTS- 0
```

10 Press 3 on the upper-control-pad to scroll down the list of event types.

11 Press 2 on the upper-control-pad to display the event type.
Event logs are not displayed when events are shown with zeros in “SELECT EVENT TYPES TO VIEW”.
An example of a pre-alarm condition is shown below:

```
VIEW PRE-ALARM EVENTS 001/016
      *PRE-ALARM:HEAT SENSOR ZONE 02 *
ADR=011.00 LOOP=2 ND=1 AUTOLEARN
TIME 10:35 02/18/2004
Pre-Alarm
Use UP/DOWN arrow keys to scroll events
```

12 Press 4 on the upper-control-pad to go back or press Exit to quit.

Clearing the Event Log

The Clear Event Log feature removes the event log from Elite Panel memory.
To clear the event log:

1 Press 3 on the upper-control-pad to display the SET ACCESS LEVEL 2 MENU.

```
SET ACCESS LEVEL 2 MENU
Enter Access Level 2 Password
Use numbered arrow keys
*****
Access will automatically expire after
120 seconds if no key is pressed.
ENTER TO PROCECEED – EXIT TO QUIT
```

2 Type the five digit code in the password field and press Enter.
The default password is 22222.

3 Press 3 on the upper-control-pad to display the MAIN MENU.

```
 MAIN MENU – V3.60216LH
>DISABLEMENTS
 VIEW DEVICES
 TEST ZONES
 SET SYSTEM TIME
 SENSOR MAINTENANCE EARLY WARNING
 ACCESS LEVEL 3
```

4 Press 1 on the upper-control-pad to navigate to ACCESS LEVEL 3.

```
MAIN MENU – V3.60216LH
 DISABLEMENTS
 VIEW DEVICES
 TEST ZONES
 SET SYSTEM TIME
 SENSOR MAINTENANCE EARLY WARNING
>ACCESS LEVEL 3
```

5 Press 2 on the upper-control-pad to display the SET ACCESS LEVEL 3 MENU:

```
SET ACCESS LEVEL 3 MENU
Enter Access Level 3 Password
Use numbered arrow keys
*****
ENTER TO PROCEED – EXIT TO QUIT
```

6 Type the five digit code in the password field and press Enter.
The default password is 33333.

```
ACCESS LEVEL 3 MENU
>EDIT CONFIGURATION
 SET TIMES
 EVENT LOG
 SYSTEM DISABLEMENTS
 LOOP  DATA TEST
```

7 Press 3 on the upper-control-pad and navigate to EVENT LOG.

```
ACCESS LEVEL 3 MENU
 EDIT CONFIGURATION
 SET TIMES
>EVENT LOG
 SYSTEM DISABLEMENTS
 LOOP  DATA TEST
```

8 Press 2 on the upper-control-pad to display the VIEW/CLEAR EVENT LOG MENU.

```
     VIEW/CLEAR EVENT LOG MENU
>View Event Log
 Clear Event Log
```

9 Press 3 on the upper-control-pad to scroll down to Clear Event Log.

10 Press 2 on the upper-control-pad to display the CLEAR EVENT LOG MENU.

```
CLEAR EVENT LOG MENU
Event Log has 1 entries
Press ENTER to clear Event Log.
Press EXIT to quit.
Press < to go back.
```

11 Press ENTER to clear the Event log.

```
CLEAR EVENT LOG MENU
Event Log has 0 entries
Press ENTER to clear Event Log.
Press EXIT to quit.
Press < to go back.
```

12 Press EXIT to quit or press 4 to go back.

Loop Data Test

The Loop Data Test feature tests loop devices connected on the Elite Panel. Refer to Section 4, “Front-Panel Menu” for more information about the Loop Data Test feature.
To perform the Loop Data Test:

1 Press 3 on the upper-control-pad to display the SET ACCESS LEVEL 2 MENU.

```
SET ACCESS LEVEL 2 MENU
Enter Access Level 2 Password
Use numbered arrow keys
*****
Access will automatically expire after
120 seconds if no key is pressed.
ENTER TO PROCECEED – EXIT TO QUIT
```

2 Type the five digit code in the password field and press Enter.
The default password is 22222.

3 Press 3 on the upper-control-pad to display the MAIN MENU.

```
MAIN MENU – V3.60216LH
>DISABLEMENTS
 VIEW DEVICES
 TEST ZONES
 SET SYSTEM TIME
 SENSOR MAINTENANCE EARLY WARNING
 ACCESS LEVEL 3
```

4 Press 1 on the upper-control-pad to navigate to ACCESS LEVEL 3.

```
MAIN MENU – V3.60216LH
 DISABLEMENTS
 VIEW DEVICES
 TEST ZONES
 SET SYSTEM TIME
 SENSOR MAINTENANCE EARLY WARNING
>ACCESS LEVEL 3
```

5 Press 2 on the upper-control-pad to display the SET ACCESS LEVEL 3 MENU:

```
SET ACCESS LEVEL 3 MENU
 Enter Access Level 3 Password
 Use numbered arrow keys
 ****
 ENTER TO PROCEED - EXIT TO QUIT
```

6 Type the five digit code in the password field and press Enter.
The default password is 33333.

```
ACCESS LEVEL 3 MENU
>EDIT CONFIGURATION
 SET TIMES
 EVENT LOG
 SYSTEM DISABLEMENTS
 LOOP DATA TEST
```

7 Press 1 on the upper-control-pad scroll up to LOOP DATA TEST.

```
ACCESS LEVEL 3 MENU
 EDIT CONFIGURATION
 SET TIMES
 EVENT LOG
 SYSTEM DISABLEMENTS
>LOOP DATA TEST
```

8 Press 2 on the upper-control-pad to display the LOOP DATA TEST.

```
LOOP DATA TEST
>SELECT LOOP 1 – (ACTIVE)
 SELECT LOOP 2
```

9 Press 2 on the upper-control-pad to select the ACTIVE loop.

```
 LOOP DATA TEST
>VIEW DATA
 CANCEL TEST
```

10 Press 2 on the upper-control-pad to begin the test using VIEW DATA.

```
LOOP DATA TEST (LOOP: 1)
Start Date : 2/18/2004  10:37:00
Good Readings: 0100800
Bad Readings: 0000000
Current Date: 2/19/2004  10:58:13
```

The test example above indicates that the loop test was started 2/18/2004 at 10:37. It also reveals that over one-hundred-thousand test readings have been recorded since the beginning of the test.

11 Press 4 on the upper-control-pad to back out of the LOOP DATA TEST screen.

```
LOOP DATA TEST
>VIEW DATA
 CANCEL TEST
```

12 Press 3 on the upper-control-pad to scroll down to CANCEL TEST.

13 Press 2 on the upper-control-pad to display the window for stopping the test.

```
      LOOP DATA TEST
PLEASE PRESS ENTER TO STOP TEST
```

14 Press ENTER to cancel the loop test.

```
LOOP DATA TEST
>SELECT LOOP 1
 SELECT LOOP 2
```

15 Press EXIT to return to the main menu.

```
11:12 Thursday February 19 2004
   AUTO CONFIGURED PANEL

USE ARROW KEYS TO ENABLE PANEL
   PRESS ? FOR HELP
```

Section 4

Front-Panel Menu

This section describes the operation of the Front-Panel Menu on the Elite Panel. Navigate the menu using the upper-control-pad of the Elite Panel.The Elite Panel provides navigation of the Front-Panel Menu for Access Level 2 and Access Level 3. Access Level 2 controls front-panel-buttons and menu settings. Access Level 3 controls Elite Panel system settings.

To operate the Front-Panel Menu of the Elite Panel:

1. Confirm that the display of the Front-Panel Menu does not contain errors after performing AUTO LEARN.
   Reference "Section 3, Troubleshooting" if error messages are displayed on the front-panel.
2. Press 3 on the upper-control-pad to display the SET ACCESS LEVEL 2 MENU.
3. Type the five digit code in the password field and press Enter.
   The default password is 22222.
4. Press 3 on the upper-control-pad to display the MAIN MENU.
5. Press 3 on the upper-control-pad to navigate to LOCAL MENU.
6. Press 2 on the upper-control-pad to select LOCAL MENU and display MAIN MENU.
7. Press 1 on the upper-control-pad to navigate to ACCESS LEVEL 3.
8. Press 2 on the upper-control-pad to select ACCESS LEVEL 3 and display SET ACCESS LEVEL 3 MENU.
9. Type the five digit code in the password field and press Enter.
   The default password is 33333.
10. Press 1 to navigate to ACCESS LEVEL 3 MENU.

The Front-Panel Menu displays the Main Menu when navigation activity stops for more than 25 seconds.

Access Level 2

Access Level 2 provides functions for:

- Disablements
- View Devices
- Test Zones
- Set System Time
- Sensor Maintenance Early Warning
- Access Level 3

```
 MAIN MENU - V3.60236
>DISABLEMENTS
 VIEW DEVICES
 TEST ZONES
 SET SYSTEM TIME
 SENSOR MAINTENANCE EARLY WARNING
 ACCESS LEVEL 3
```

Disablements

The Disablements Menu provides an option for viewing and restoring disabled features as well as setting timed or un-timed disablements for loops, zones, addresses, audible devices and panel I/O:

```
DISABLEMENTS MENU
>DISABLE LOOPS
 DISABLE ZONES
 DISABLE ADDRESSES
 DISABLE AUDIBLE DEVICES
 DISABLE PANEL I/O
 VIEW & RESTORE DISABLED FEATURES
```

The timed function provides a disablement-duration of 30 minutes to 24 hours and stops the disablement when the duration-time expires. The un-timed function provides an infinite disablement that stops when “cleared” on the menu.

Disable Loops

The DISABLE LOOPS function disables loop-devices from reporting fire signals to the Elite Panel.
This function does not disable loop-devices from reporting trouble and supervisory signals to the Elite Panel.

CAUTION!

⚠ The DISABLE LOOPS function does not isolate the Elite Panel from SLC connections.
Disconnect SLC connections to the Elite Panel when troubleshooting or when performing wiring changes.

Disable Zones

All detection devices, including manual pull stations, are disabled in the selected zone.

When a device is disabled, the Elite Panel ignores the analog value reported by the device. All other faults for the device such as missing device, double address, internal fault, type changed and bad data are still reported by the Elite Panel.

Disable Addresses

Any loop device can be disabled using this menu option. Sub-addresses may be individually disabled when using devices with more than one input or output.

When a device is disabled, the Elite Panel ignores the analog value reported by the device. All other faults for the device such as missing device, double address, internal fault, type changed and bad data are still reported by the Elite Panel.

Disable Audible Devices

This menu option disables all audible device outputs connected to the control panel. An audible device output is defined as any output that has been set to respond to Silence and Evacuate panel commands. Audible device outputs may be directly wired to the control panel (NAC 1, NAC 2, NAC 3 and NAC 4) connections) or loop driven devices.

The NAC Trouble indicator will be illuminated, as well as the Point Bypassed Indicator.

Disable Panel I/O

This menu option disables or enables panel input and output functions. Timed disabling can be set to occur between 30 minutes to 24 hours. Un-timed disabling can be set to occur immediately.

Panel Inputs

Programmable	Default = Enabled	Disables or enables the front-panel Programmable Function button.
Fire Drill	Default = Enabled	Disables or enables the front-panel Fire Drill button.

Panel Outputs

NAC 1	Default = Enabled	Disables or enables NAC 1 on terminal X1 of the Control Unit Board. To set these parameters using the Elite Panel Front-Panel Menu: 1 Select ACCESS LEVEL 2 2 Select ACCESS LEVEL 3 3 Select EDIT CONFIGURATION 4 Select EDIT PANEL I/O 5 Select EDIT PANEL OUTPUTS 6 Scroll through the options for NAC CIRCUIT 1
NAC 2	Default = Enabled	Disables or enables NAC 2 on terminal X1 of the Control Unit Board. To set these parameters using the Elite Panel Front-Panel Menu: 1 Select ACCESS LEVEL 2 2 Select ACCESS LEVEL 3 3 Select EDIT CONFIGURATION 4 Select EDIT PANEL I/O 5 Select EDIT PANEL OUTPUTS 6 Scroll through the options for NAC CIRCUIT 2
NAC 3	Default = Enabled	Disables or enables NAC 3 on terminal X1 of the Control Unit Board. To set these parameters using the Elite Panel Front-Panel Menu: 1 Select ACCESS LEVEL 2 2 Select ACCESS LEVEL 3 3 Select EDIT CONFIGURATION 4 Select EDIT PANEL I/O 5 Select EDIT PANEL OUTPUTS 6 Scroll through the options for NAC CIRCUIT 3
NAC 4	Default = Enabled	Disables or enables NAC 4 on terminal X1 of the Control Unit Board. To set these parameters using the Elite Panel Front-Panel Menu: 1 Select ACCESS LEVEL 2 2 Select ACCESS LEVEL 3 3 Select EDIT CONFIGURATION 4 Select EDIT PANEL I/O 5 Select EDIT PANEL OUTPUTS 6 Scroll through the options for NAC CIRCUIT 4

FIRE ROUTING	Default = Enabled	Disables or enables FIRE ROUTING on terminal X2 of the Control Unit Board. To set these parameters using the Elite Panel Front-Panel Menu: 1 Select ACCESS LEVEL 2 2 Select ACCESS LEVEL 3 3 Select EDIT CONFIGURATION 4 Select EDIT PANEL I/O 5 Select EDIT PANEL OUTPUTS 6 Scroll through the options for FIRE ROUTING
PROG OUTPUT	Default = Enabled	Disables or enables PROG OUTPUT on terminal X2 of the Control Unit Board. To set this parameter using the Elite Panel Front-Panel Menu: 1 Select ACCESS LEVEL 2 2 Select ACCESS LEVEL 3 3 Select EDIT CONFIGURATION 4 Select EDIT PANEL I/O 5 Select EDIT PANEL OUTPUTS 6 Scroll through the options for PROG OUTPUT
TROUBLE ROUTING	Default = Enabled	Disables or enables TROUBLE ROUTING on terminal X2 of the Control Unit Board. To set these parameters using the Elite Panel Front-Panel Menu: 1 Select ACCESS LEVEL 2 2 Select ACCESS LEVEL 3 3 Select EDIT CONFIGURATION 4 Select EDIT PANEL I/O 5 Select EDIT PANEL OUTPUTS 6 Scroll through the options for TROUBLE ROUTING

View & Restore Disabled Features

To cancel disablements, scroll through the menu options and toggle disablements to the normal condition. Another way to cancel disablements is to use the View / Restore Disablements option to scroll through active disablements and individually enable each disablement by pressing the Enter button.

View Devices

This menu option is used by experienced personnel to investigate system status and may help in fault finding.

The View Devices option displays addresses connected to each detection circuit. For each address & sub-address, the LCD status display provides the device type, zone and location text.

Analog devices are displayed in the menu with indicators representing the connected device. Digital input devices such as manual pull stations points and switch monitor units are displayed as Normal or Activated. Output devices are displayed as either Off, Intermittent or Continuous.

Status conditions are displayed in the Devices By Loop or View Devices By Zone area of the menu.

Test Zones

Each zone may be individually put into a Test Mode condition.

Test Zone (1 – 500)

When test mode is selected, the devices in the zone may be tested and the Elite Panel will automatically reset after 3 seconds.

When a zone is put into test mode, the user is prompted to select a number of test mode options. These options are retained for each zone, but may be changed at any time.

Local NAC On – Off (Default = On)

When set to the ON position, all NAC outputs will sound for the duration of the fire event. The NACs will be muted when the panel automatically resets.
On systems with a high number of Loop powered NACs connected, all NACs may not be able to activate within the 3 second fire period and therefore loop NAC confirmation may be intermittent.

Panel Outputs On – Off (Default = Off)

When selected in the ON position, all panel outputs other than the NACs will operate in accordance with their standard configuration. This includes the Fire and Fire Routing outputs as well as the Alarm relay contact.

Loop Outputs On – Off (Default = Off)

When selected in the ON position, all loop driven outputs other than the loop NAC outputs will operate in accordance with their standard configuration.

Start Test Mode ?

Initiate zone testing using this screen after setting parameters in Test Zone (1 – 500), Local NAC On – Off, Panel Outputs On – Off and Loop Outputs On – Off.
The screen display is:

```
Test Mode will expire after 15 minutes
if zone is idle.
Press ENTER to start Test Mode.
Press EXIT to quit.
Press < to go back,
```

A 15 minute timer begins decrementing when a zone is set in test mode. The test will automatically stop after the timer stops. The timer automatically resets to 15 minutes whenever a device is activated in the zone test.

Include Pull Stations Yes – No (Default = No)

When selected to the ON position, all pull stations will also be included in the Test Mode for the zone. The normal use of this facility is to set the Include Pull Stations to No and test all smoke detection devices in the zone. At this stage, all pull stations will still operate and will take the panel out of test mode. When all devices in the zone have been tested, then the zone is put into test, including pull stations.
All pull stations can then be tested and will operate the test mode when a zone (or zones) has been set to test mode, then a 15 minute timer is started. This timer will decrement and after 15 minutes the zone will be automatically taken out of test mode. Whenever a device is activated in the zone in test, the timer will automatically be reset to 15 minutes.

Set System Time

This menu option sets the panel date and time. Set the system time to log events in the event log.
Control panel changes performed in 2010 provide automatic compensation for daylight saving time.

Sensor Maintenance Early Warning

This option provides contamination status for Loop 1 through 4.

Events and Status

This section describes events and the status of the front-panel display while operating the Elite Panel.
The following events are described:

- Fire Event
- Trouble Event
- Pre Alarm Event

Fire Event

In the event of a fire, the twin red FIRE lamps and the appropriate Fire Zone indicator will flash (if connected). Details of the fire activation (address and location text) will be displayed on the front-panel.

Fire warning NACs will sound throughout the building and the panel fire contact, alarm contact and Fire Routing Outputs will be energized. The panel buzzer will be pulsing, but can be silenced by pressing the Silence Buzzer button.

To silence fire NACs, press any of the menu navigation buttons and enter the Access 2 password then press the Enter button. Panel controls will be enabled and will remain enabled for one minute after pressing the last key. Pressing the Alarm Silence button will silence the NACs. The NACs can be started again by pressing the Re-Sound Alarm button. The system can be reset by pressing the Reset button.

Press the More Events button on the front-panel to display the status of more than two fire events.

The maximum Fire event delay setting shall be less than 10 seconds.

Trouble Event

If there is a fault on the system, the yellow General Trouble indicator will flash and there may be other fault LED indications which identify the nature of the fault. The Fault Contact and Fault Routing outputs will energize and the panel buzzer will sound continuously.

Details of the fault will be provided on the front-panel display. The panel buzzer can be silenced at any time by pressing the Silence Buzzer button.

Press the More Events button on the front-panel to display the status of more than two fire events.

The maximum Trouble event delay setting shall be less than 120 seconds.

Pre-alarm Event

Sensors or inputs can generate a pre-alarm. A pre-alarm is used to warn of a slow change in the analog level of detection devices. A smoldering fire can be an example of a condition that can cause a pre alarm event. When a pre-alarm is generated, the control panel will illuminate the pre-alarm LED and will sound the internal buzzer continuously. The address and location of the source of the pre-alarm will be indicated in the LCD status display.

The source of the pre-alarm input should be investigated. The panel buzzer can be silenced at any time by pressing the Silence Buzzer button.

Press the More Events button on the front-panel to display the status of more than two fire events.

The maximum Pre-Alarm event delay setting shall be less than 60 seconds.

Access Level 3

Access Level 3 provides settings for:

- Edit Configuration
- Set Times
- View Event Log
- System Disablements
- Loop Data Test

Access Level 3 settings are downloaded to the Elite Panel from the VES monitoring center.

Front-Panel Controls

Access Level 2 operates the following front-panel controls:

- Alarm Silence
- Re-sound Alarm
- Reset
- Fire Drill & Programmable Function

Reference "Section 2, Overview" for more information concerning these controls.

This page intentionally left blank.

Section 5

Maintenance and Repair

This appendix provides procedures to maintain and repair the Elite Panel. *Reference Appendix B, "Equipment List" to identify VES part numbers that are required for replacing components described in this section.*

Maintenance

Perform the following procedures to maintain operation of the Elite Panel.

Inspecting Batteries

Inspect the standby-batteries annually to determine the connection integrity to the 4 Amp OEM 1 Power Supply and to confirm the voltage capacity available for operating the Elite Panel during power failures.

To determine these operating conditions:

1. Confirm that the Elite Panel is operating in Normal-Standby mode.
   Reference Section 3, "Installation" for information about the Normal-Standby mode.
2. Confirm that the heart-beat indicator (HEART BEAT) on the 4 Amp OEM 1 1 Power Supply is flashing.
3. Confirm that the disconnected-battery indicator (BAT DISCON) on the 4 Amp OEM 1 1 Power Supply is not illuminated.
4. Confirm that the low-battery indicator (BAT LOW) on the 4 Amp OEM 1 1 Power Supply is not illuminated.

Reference Section 2,"Overview" for heart-beat, disconnected-battery and low-battery indicators on the 4 Amp OEM 1 Power Supply.

Replacing Standby-Batteries

Replace standby-batteries when the service period reaches 3 to 5 years or when the low-battery indicator illuminates on the 4 Amp OEM 1 Power Supply. Specify replacement batteries that are sealed-lead-acid and that are UL recognized.

Removing the Standby-Batteries

To remove the existing standby-batteries:

1. Disconnect the jumper-cable connection between Battery 1 and Battery 2.
2. Disconnect the red-cable from the positive terminal of Battery 1.
3. Disconnect the black-cable from the negative terminal of Battery 2.
4. Remove Battery 1 and Battery 2 from the bottom of the Elite Panel cabinet.
5. Re-cycle Battery 1 and Battery 2 according to the manufacturer procedures provided in the packaging of the replacement batteries.

Installing the Standby-Batteries

To install the replacement standby-batteries:

1. Place standby-batteries at the bottom of the Elite Panel cabinet.
2. Connect the black-cable from the TB3 BATTERY connector to the negative terminal of Battery 2.
3. Connect the red-cable from the TB3 BATTERY connector to the positive terminal of Battery 1.
4. Connect the jumper-cable from the negative terminal of Battery 1 to the positive terminal of Battery 2.

The figure below illustrates the connection required for installing replacement standby-batteries in the Elite Panel:

Figure 5-1

Installing Standby-Batteries

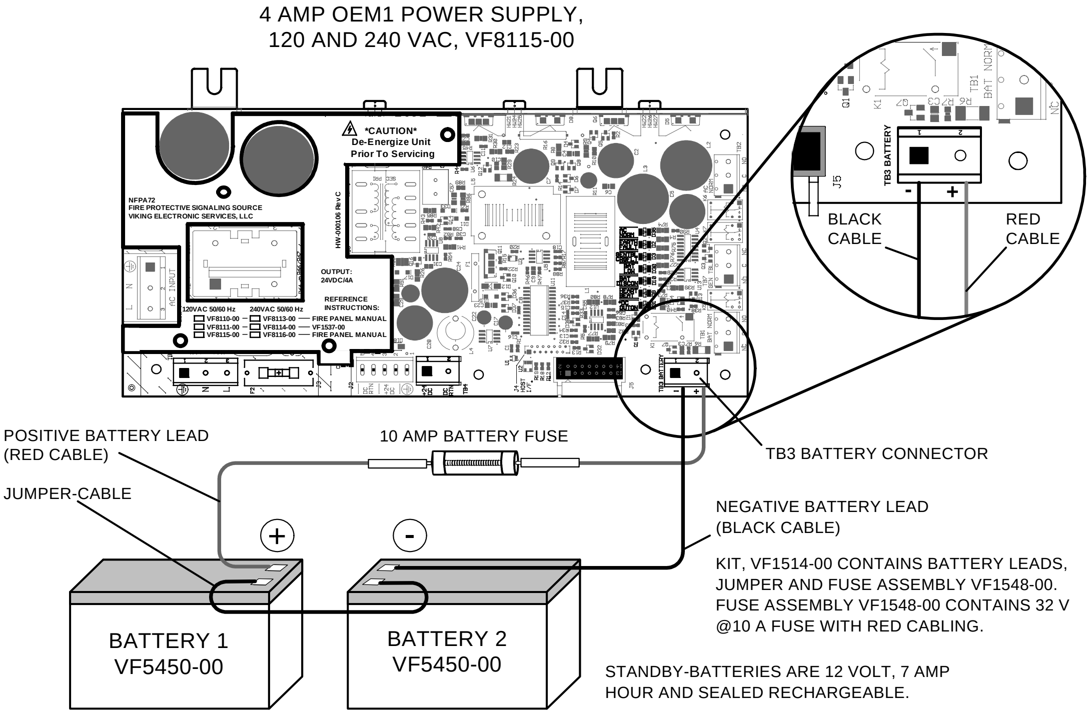
4 AMP OEM1 POWER SUPPLY,
120 AND 240 VAC, VF8115-00
CAUTION
De-Energize Unit
Prior To Servicing
NFPA72
FIRE PROTECTIVE SIGNALING SOURCE
VIKING ELECTRONIC SERVICES, LLC
OUTPUT:
24VDC/4A
REFERENCE
INSTRUCTIONS:
120VAC 50/60 Hz
240VAC 50/60 Hz
VF8110-00
VF8111-00
VF8115-00
VF8113-00
VF8114-00
VF8116-00
FIRE PANEL MANUAL
VF1537-00
FIRE PANEL MANUAL
TB3 BATTERY
BLACK
CABLE
RED
CABLE
-
+
POSITIVE BATTERY LEAD
(RED CABLE)
10 AMP BATTERY FUSE
TB3 BATTERY CONNECTOR
JUMPER-CABLE
NEGATIVE BATTERY LEAD
(BLACK CABLE)
+
-
BATTERY 1
VF5450-00
BATTERY 2
VF5450-00

KIT, VF1514-00 CONTAINS BATTERY LEADS, JUMPER AND FUSE ASSEMBLY VF1548-00. FUSE ASSEMBLY VF1548-00 CONTAINS 32 V @10 A FUSE WITH RED CABLING.

STANDBY-BATTERIES ARE 12 VOLT, 7 AMP HOUR AND SEALED RECHARGEABLE.

The series connection illustrated above provides the 24 volt standby voltage required by the Elite Panel. Do not connect the two batteries in parallel. A parallel connection will not provide the 24 volts required for operating the Elite Panel in a standby condition.

Replacing Fuses

A 10 Amp battery fuse and a 3 Amp power-supply fuse are provided to protect the Elite Panel against circuit overloads. During the life of the product it may be necessary to replace one or both of the fuses to restore operation to the Elite Panel.

Replace a fuse only after replacing the components responsible for causing the fuse failure.
Fuse failure is not a condition caused by the fuse. Diagnose and replace components in the fuse-circuit before replacing the fuse and operating the Elite Panel.

10 Amp Battery Fuse

Replace the 10 Amp battery-fuse by removing the fuse, the battery wiring and the standby-batteries.
Specify kit VF1548-00 to replace the red-cable containing the 10 Amp fuse or specify battery-lead-kit VF1514-00 to replace the red-cable containing the 10 Amp fuse, the jumper-cable and the black-cable.
Replace the 3 Amp Power-Supply Fuse by removing it from the housing contained on the circuit board of the 4 Amp OEM 1 Power Supply. Install the replacement fuse in the housing and then test the power supply to determine that it operates.

Removing the 10 Amp Battery-Fuse

To remove the fuse:

1. Disconnect the jumper-cable connection between Battery 1 and Battery 2.
2. Disconnect the red-cable from the positive terminal of the TB3 BATTERY connector.
3. Disconnect the black-cable from the negative terminal of the TB3 BATTERY connector.
4. Dispose of the cables described in steps 1 through 3 above.
5. Remove existing Battery 1 and Battery 2 from the bottom of the Elite Panel cabinet and re-cycle them according to the manufacturer guidelines.

Installing the 10 Amp Battery-Fuse

To install the new 10 Amp Battery-Fuse:

1. Mount the new standby-batteries in the base of the Elite Panel cabinet.
2. Connect the jumper-cable from the negative terminal of Battery 1 to the positive terminal of Battery 2.
3. Connect the black-cable from the negative terminal of Battery 2 to the negative TB3 BATTERY connector on the 4 Amp OEM 1 Power Supply.
4. Connect the red-cable from the positive terminal of Battery 1 to the positive TB3 BATTERY connector on the 4 Amp OEM 1 Power Supply.
5. Determine that trouble conditions are not reported by the Elite Panel following the fuse replacement to confirm that the installation was performed correctly.

Reference the illustration provided in Figure 6-1, “Installing Standby-Batteries” for installing the battery lead kit VF1514-00. This kit provides a red-cable containing the 10 Amp fuse, a jumper-cable and a black-cable.
Specify kit VF1548-00 for the red-cable containing the 10 Amp fuse.

3 Amp Power-Supply Fuse

The following procedures describe methods for replacing the 3 Amp power-supply fuse.

Removing the 3 Amp Power Supply Fuse

To remove the fuse:

1. Turn off 120 VAC power to the 4 Amp OEM 1 Power Supply.
2. Locate the housing containing the 3 Amp fuse.

The figure below illustrates the location of the 3 Amp fuse on the 4 Amp OEM 1 Power Supply.

Figure 5-2

3 Amp Fuse Location

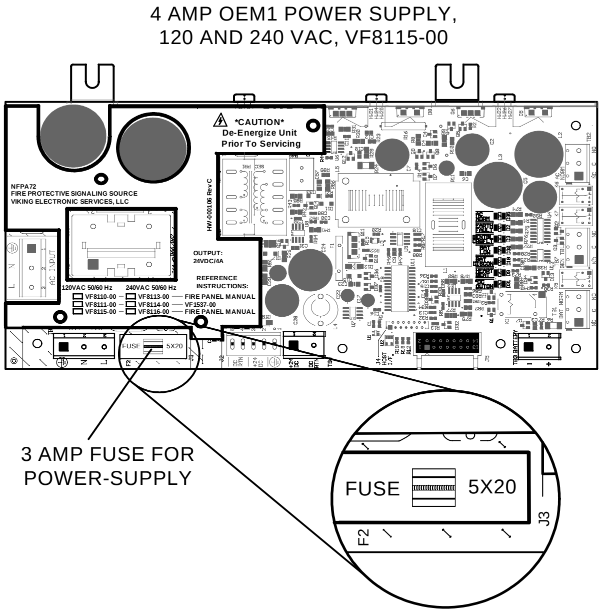
4 AMP OEM1 POWER SUPPLY,
120 AND 240 VAC, VF8115-00
CAUTION
De-Energize Unit
Prior To Servicing
NFPA72
FIRE PROTECTIVE SIGNALING SOURCE
VIKING ELECTRONIC SERVICES, LLC
OUTPUT:
24VDC/4A
REFERENCE
INSTRUCTIONS:
120VAC 50/60 Hz
240VAC 50/60 Hz
VF8110-00
VF8111-00
VF8115-00
VF8113-00
VF8114-00
VF8116-00
FIRE PANEL MANUAL
VF1537-00
FIRE PANEL MANUAL
AC INPUT
FUSE
5X20
3 AMP FUSE FOR
POWER-SUPPLY
FUSE
5X20
F2
J3

3. Gently insert a small-flat-blade-screwdriver into the slot of the fuse-housing.

The figure below illustrates the upper and lower portions of the housing containing the 3 Amp fuse.

Figure 5-3

3 Amp Fuse Housing

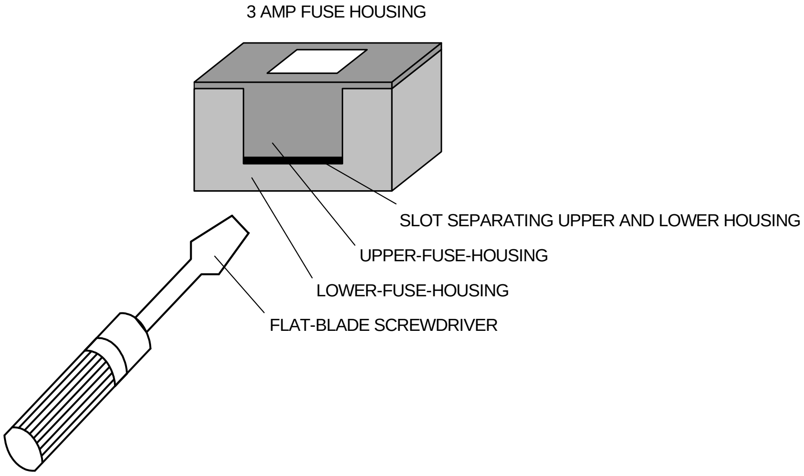
3 AMP FUSE HOUSING
SLOT SEPARATING UPPER AND LOWER HOUSING
UPPER-FUSE-HOUSING
LOWER-FUSE-HOUSING
FLAT-BLADE SCREWDRIVER

4. Slide the length of the screwdriver into the slot of the fuse-housing until the upper-half dislodges from the lower-half of the housing.
5. Remove the fuse from the upper-half of the fuse-housing.

Installing the 3 Amp Power Supply Fuse

To install the new fuse:

1. Insert the fuse in the upper-housing.
2. Center the position of the fuse in the upper-housing.
3. Press the upper-housing on the lower-housing until the halves snap together.
4. Restore 120 VAC power to the 4 Amp OEM 1 Power Supply.
5. Check LED status indicators to confirm that the 4 Amp OEM 1 Power Supply is operating correctly. Confirm that the:
    - HEART BEAT is flashing
    - DC OUTON is lit continuously
    - AC NORM is lit continuously

    Reference Section 3, “Installation” for diagnostic information when testing a failure condition.

Replacing Internal Components

Replace internal components of the Elite Panel during maintenance intervals or following component failures.
Connect internal cabling of the Elite Panel as illustrated below.
The figure below illustrates internal-component-wiring of the Elite Panel:

Figure 5-4

Internal-Component-Wiring

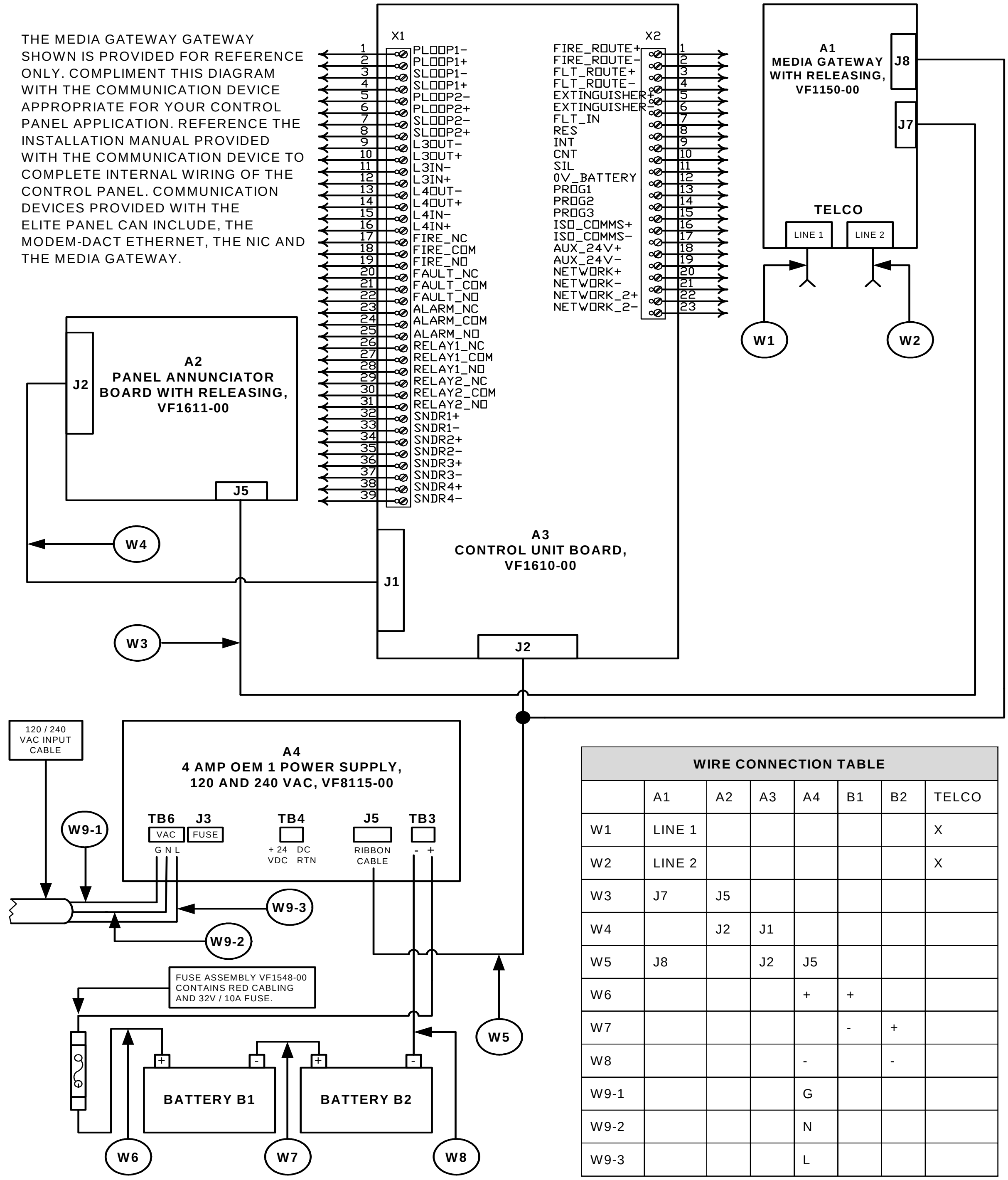

THE MEDIA GATEWAY GATEWAY SHOWN IS PROVIDED FOR REFERENCE ONLY. COMPLIMENT THIS DIAGRAM WITH THE COMMUNICATION DEVICE APPROPRIATE FOR YOUR CONTROL PANEL APPLICATION. REFERENCE THE INSTALLATION MANUAL PROVIDED WITH THE COMMUNICATION DEVICE TO COMPLETE INTERNAL WIRING OF THE CONTROL PANEL. COMMUNICATION DEVICES PROVIDED WITH THE ELITE PANEL CAN INCLUDE, THE MODEM-DACT ETHERNET, THE NIC AND THE MEDIA GATEWAY.

FUSE ASSEMBLY VF1548-00 CONTAINS RED CABLING AND 32V / 10A FUSE.

X1
PLOOP1-
PLOOP1+
SLOOP1-
SLOOP1+
PLOOP2-
PLOOP2+
SLOOP2-
SLOOP2+
L3OUT-
L3OUT+
L3IN-
L3IN+
L4OUT-
L4OUT+
L4IN-
L4IN+
FIRE_NC
FIRE_COM
FIRE_NO
FAULT_NC
FAULT_COM
FAULT_NO
ALARM_NC
ALARM_COM
ALARM_NO
RELAY1_NC
RELAY1_COM
RELAY1_NO
RELAY2_NC
RELAY2_COM
RELAY2_NO
SNDR1+
SNDR1-
SNDR2+
SNDR2-
SNDR3+
SNDR3-
SNDR4+
SNDR4-
X2
FIRE_ROUTE+
FIRE_ROUTE-
FLT_ROUTE+
FLT_ROUTE-
EXTINGUISHER+
EXTINGUISHER-
FLT_IN
RES
INT
CNT
SIL
0V_BATTERY
PROG1
PROG2
PROG3
ISO_COMMS+
ISO_COMMS-
AUX_24V+
AUX_24V-
NETWORK+
NETWORK-
NETWORK_2+
NETWORK_2-
A1
MEDIA GATEWAY WITH RELEASING, VF1150-00
J8
J7
TELCO
LINE 1
LINE 2
W1
W2
A2
PANEL ANNUNCIATOR BOARD WITH RELEASING, VF1611-00
J2
J5
W4
W3
J1
A3
CONTROL UNIT BOARD, VF1610-00
J2
120 / 240 VAC INPUT CABLE
A4
4 AMP OEM 1 POWER SUPPLY, 120 AND 240 VAC, VF8115-00
TB6
J3
TB4
J5
TB3
VAC
FUSE
G N L
+ 24 VDC
DC RTN
RIBBON CABLE
- +
W9-1
W9-3
W9-2
W5
BATTERY B1
BATTERY B2
+
-
W6
W7
W8

WIRE CONNECTION TABLE

	A1	A2	A3	A4	B1	B2	TELCO
W1	LINE 1						X
W2	LINE 2						X
W3	J7	J5					
W4		J2	J1				
W5	J8		J2	J5			
W6				+	+		
W7					-	+	
W8				-		-	
W9-1				G			
W9-2				N			
W9-3				L			

Replacing Cabinet Components

Reference Section 3, “Installation” when replacing the cabinet door or enclosure-box of the Elite Panel.

This page intentionally left blank.

Appendix A
Specifications

This appendix provides electrical and environmental specifications for the Elite Panel.

Electrical

Electrical specifications for Standby and Alarm current are typical values.

Standby and Alarm Current

Loops	Standby	Alarm (No Load)
2	255mA	540mA
4	355mA	650mA

Earth Fault Indication

A ground fault indication occurs on the Elite Panel when a minimum of 30K Ohms exists between earth-ground and either DC RTN or +24 VDC of the power-supply.

SLC Ratings

Terminal	Connection	Rating
1	LOOP 1 (- OUT)	32VDC @ 400mA
2	LOOP 1 (+ OUT)	
3	LOOP 1 (- IN)	32VDC @ 400mA
4	LOOP 1 (+ IN)	
5	LOOP 2 (- OUT)	32VDC @ 400mA
6	LOOP 2 (+ OUT)	
7	LOOP 2 (- IN)	32VDC @ 400mA
8	LOOP 2 (+ IN)	
9	LOOP 3 (- OUT)	32VDC @ 400mA
10	LOOP 3 (+ OUT)	
11	LOOP 3 (- IN)	32VDC @ 400mA
12	LOOP 3 (+ IN)	
13	LOOP 4 (- OUT)	32VDC @ 400mA
14	LOOP 4 (+ OUT)	
15	LOOP 4 (- IN)	32VDC @ 400mA
16	LOOP 4 (+ IN)	

Programmable Relay Contact Ratings

Terminal	Connection	Rating
17	FIRE 1 (NC) Not Supervised	30 VDC @ 1A, 1PF
18	FIRE 1 (C) Not Supervised	30 VDC @ 1A, 1PF
19	FIRE 1 (NO) Not Supervised	30 VDC @ 1A, 1PF
20	TROUBLE (NC) Not Supervised	30 VDC @ 1A, 1PF
21	TROUBLE (C) Not Supervised	30 VDC @ 1A, 1PF
22	TROUBLE (NO) Not Supervised	30 VDC @ 1A, 1PF
23	FIRE 2 (NC) Not Supervised	30 VDC @ 1A, 1PF
24	FIRE 2 (C) Not Supervised	30 VDC @ 1A, 1PF
25	FIRE 2 (NO) Not Supervised	30 VDC @ 1A, 1PF
26	SUPERVISORY (NC) Not Supervised and not programmable	30 VDC @ 1A, 1PF
27	SUPERVISORY (C) Not Supervised and not programmable	30 VDC @ 1A, 1PF
28	SUPERVISORY (NO) Not Supervised and not programmable	30 VDC @ 1A, 1PF
29	AUXILIARY (NC) Not Supervised	30 VDC @ 1A, 1PF
30	AUXILIARY (C) Not Supervised	30 VDC @ 1A, 1PF
31	AUXILIARY (NO) Not Supervised	30 VDC @ 1A, 1PF

Programmable Special Application NAC Outputs

Terminal	Connection	Rating
32	NAC 1 (+)	(19.3 - 25.95) VDC @ 2.5 A
33	NAC 1 (-)	
34	NAC 2 (+)	(19.3 - 25.95) VDC @ 2.5 A
35	NAC 2 (-)	
36	NAC 3 (+)	(19.3 - 25.95) VDC @ 2.5 A
37	NAC 3 (-)	
38	NAC 4 (+)	(19.3 - 25.95) VDC @ 2.5 A
39	NAC 4 (-)	

Reference Appendix B, “Equipment List” for special application devices that are authorized for use with the Elite Panel.

Power Output Circuits

Terminal	Connection	Rating
1	FIRE ROUTING (+)	24 VDC @ 500mA
2	FIRE ROUTING (-)	
3	TROUBLE ROUTING (+)	24 VDC @ 500mA
4	TROUBLE ROUTING (-)	
5	PROGRAMMABLE OUTPUT (+)	24 VDC @ 500mA
6	PROGRAMMABLE OUTPUT (-)	

The output connections of FIRE ROUTING, TROUBLE ROUTING and PROGRAMMABLE OUTPUT are supervised and regulated at 24 VDC. The PROGRAMMABLE OUTPUT provides a special application output in the range of 21.37 TO 25.9 VDC when operating solenoid devices. These output connections are common, zonal and programmable.

Unsupervised Inputs

Terminal	Connection	Rating
7	TROUBLE INPUT (TBL) - Not Supervised -	24 VDC @ 2.4mA Input Rating
8	RESET INPUT (RES) - Not Supervised -	24 VDC @ 2.4mA Input Rating
9	INTERMITTENT INPUT (INT) - Not Supervised -	24 VDC @ 2.4mA Input Rating
10	CONTINUOUS INPUT (CNT) - Not Supervised -	24 VDC @ 2.4mA Input Rating
11	SILENCE/ACK INPUT (SIL) - Not Supervised -	24 VDC @ 2.4mA Input Rating
12	DC GROUND (0V) - Not Supervised -	24 VDC @ 2.4mA Input Rating
13	PROGRAMMABLE INPUT 1 (PR1) - Not Supervised -	24 VDC @ 2.4mA Input Rating
14	PROGRAMMABLE INPUT 1 (PR2) - Not Supervised -	24 VDC @ 2.4mA Input Rating
15	PROGRAMMABLE INPUT 1 (PR3) - Not Supervised -	24 VDC @ 2.4mA Input Rating

RS485 Serial Bus

TERMINAL	CONNECTION	RATING
16	COMMS (+)	(+) DATA 3.3 VDC @ 30 mA
17	COMMS (-)	(-) DATA

Auxiliary 24 VDC

TERMINAL	CONNECTION	RATING
18	Aux 24V (+)	24 VDC @ 500mA
19	Aux 24V (-)	

The Aux 24 V connection provides a regulated 24 VDC output. This connection provides a special application output in the range of 21.37 to 25.9 VDC when operating solenoid devices.

eNET Terminals

TERMINAL	CONNECTION	RATING
20	NET OUT (+)	(+) DATA 3.3 VDC @ 30 mA
21	NET OUT (-)	(-) DATA
22	NET IN (+)	(+) DATA 3.3 VDC @ 30 mA
23	NET IN (-)	(-) DATA

4 Amp OEM 1 Power Supply

Fuse	3 A, 250 VAC, Slow-Blow, 5 x 20 mm
Input (Supervised)	120 or 240 VAC 50/60Hz
Output Voltage	24 VDC +10%, -15% Regulation over entire load range
Output Current	0 - 4 Amps
Charge Current	Fast Charge: 1.25 A Trickle Charge: 1.25 A (Voltage Limited)
Battery - Charging Type	Two 12 VDC SLA standby-batteries wired in series
Transfer Voltage	VF8115-00: 120 VAC Transfer @ 75 VAC 240 VAC Transfer @ 160 VAC

The specifications above pertain to terminations of the standby-battery at the Elite Panel.

AC Line Connection

Connector	Terminal	Description	Voltage	Current
TB6	**L**	AC LINE	110 to 120 VAC @ 50/60Hz 220 to 240 VAC @ 50/60Hz	2.1 A 1.1 A
	N	AC NEUTRAL		
	E	EARTH GROUND		
TB4	+ 24 VDC	+ 24 VDC	+ 24 VDC	0 - 4 A
	DC RTN	DC RTN	- 24 VDC	
TB3	+	+ 24 VDC	+ 24 VDC	5 A
	-	DC RTN	0 VDC	

Cabling

The following specifications identify the acceptable range of wire gages for field wiring, battery, 24 VDC and AC power connections:

SLC Wiring For Class A and B

Wire Range	Description
18 AWG	3900 Feet
16 AWG	6200 Feet
14 AWG	10,000 Feet

Power

Designation	Terminal	Wire Range	Description
AC Power	TB6 (L, N, E)	14 - 12 AWG	Line, neutral and ground connections
Battery Connection	TB3 (+ / -)	18 - 12 AWG	Positive and negative connections for the standby-batteries
24 VDC	TB4	18 - 12 AWG	Positive and negative connections for the 24 VDC connection on the 4 Amp OEM 1 Power Supply.

Cabling Construction

Grounding Conductors	Install ground conductors with 12 AWG cabling to support branch circuits of the Elite Panel.
Branch Circuits	Protect branch circuits from the AC power source with a 20 Amp fuse.
Material	All field wiring should be installed using fire rated cables according to the NFPA.
Cross Sectional Size	The cross sectional size of SLC cables should be determined based on length and the number of devices in use. Connect SLC cabling using a minimum of 1mm cross sectional area.

Operating Environment

Low Temperature	32 +/- 3°F (0 +/- 2°C)	Dry indoor use only
High Temperature	120+/- 3°F (49 +/- 2°C)	Dry indoor use only
Relative Humidity	93% +/- 2% @ 90 +/- 3°F (32 +/- 2°C)	This device functions in an atmosphere of relative humidity up to 93 percent, non-condensing.

Physical Specifications

Dimensions	24”H X 14-1/2”W X 4-3/4”D
Mounting	1/4” Maximum screw diameter

Appendix B

Equipment List

This appendix provides models and supporting equipment for the A-Series of the VES Elite Panel.

VES Elite Panels

The following models are provided for the A-Series Elite Panel:

MODELS	FEATURES	COLOR
VF1460-10	2 Loop Panel, No Communication	Red
VF1460-40	2 Loop Panel, No Communication	Gray
VF1461-10	2 Loop Panel, Media Gateway	Red
VF1461-40	2 Loop Panel, Media Gateway	Gray
VF1462-10	2 Loop Panel, NIC (Network Interface Card)	Red
VF1462-40	2 Loop Panel, NIC (Network Interface Card)	Gray
VF1464-10	2 Loop Panel, Modem-DACT Ethernet	Red
VF1464-40	2 Loop Panel, Modem-DACT Ethernet	Gray
VF1465-10	2 Loop Panel, eNet Interface	Red
VF1465-40	2 Loop Panel, eNet Interface	Gray
VF1480-10	4 Loop Panel, Loop Expansion Module, No Communication	Red
VF1480-40	4 Loop Panel, Loop Expansion Module, No Communication	Gray
VF1481-10	4 Loop Panel, Loop Expansion Module & Media Gateway	Red
VF1481-40	4 Loop Panel, Loop Expansion Module & Media Gateway	Gray
VF1482-10	4 Loop Panel, Loop Expansion Module & NIC (Network Interface Card)	Red
VF1482-40	4 Loop Panel, Loop Expansion Module & NIC (Network Interface Card)	Gray
VF1484-10	4 Loop Panel, Loop Expansion Module & Modem-DACT Ethernet	Red
VF1484-40	4 Loop Panel, Loop Expansion Module & Modem-DACT Ethernet	Gray
VF1485-10	4 Loop Panel, eNet Interface	Red
VF1485-40	4 Loop Panel, eNet Interface	Gray

Loop Devices and Accessories

The following A-Series loop devices and accessories are authorized for use with the Elite Panel:

VES Models	**Air Products Models**	**Loop Devices**
VF4990	**MB-SDRT-AA**	Multi-Flex Sounder Base Analog Addressable
VF4991	**SL-DAA-P**	2-Wire Analog Addressable Photoelectric Duct Smoke Detector
VF4992	**SL-DA-4R-P**	4-Wire Analog Addressable Photoelectric Duct Smoke Detector
VES Models	**Apollo Models**	**Loop Devices**
VF5630	**45681-210**	95A Mounting Base 4"
VF5634	**45681-211**	95A Isolator Base-SC
VF5631	**45681-225**	95A Mounting Base 6"
VF5636	**45681-234**	95A Low Profile Relay Base 6”
VF5635	**45681-242**	95A Relay Base 4”
VF5632	**45681-250**	Base 6” E-Z Fit
VF5633	**45681-321**	95A Base 20D Isolator
VF5604	**55000-266**	95A Loop Powered Beam Detector
VF5605	**55000-750**	95A Isolator
VF5664	**55000-790**	95A Dual Priority Switch Monitor Module
VF5662	**55000-805**	95A Switch Monitor Module
VF5663	**55000-806**	95A Priority Switch Monitor Module
VF5665	**55000-820**	95A Switch Monitor Input/Output Module
VF5666	**55000-825**	95A Sounder Control Module
VF5660	**55000-830**	95A Mini Priority Switch Monitor Module
VF5661	**55000-831**	95A Mini Switch Monitor Module
VF5667	**55000-863**	95A Relay Output Module
VF5668	**55000-450**	95A Heat Detector
VF5669	**55000-550**	Ion Smoke Detector
VF5670	**55000-650**	Optical Smoke Detector
VF5671	**55000-886**	Multi Sensor

VES Models	Apollo Models	Loop Devices
VF5602	**58000-450**	Discovery Heat Detector
VF5600	**58000-550**	Discovery Ionization Smoke Detector
VF5601	**58000-650**	Discovery Photo-Electric Smoke Detector
VF5603	**58000-750**	Discovery Multi-sensor Detector
VF5608	**55000-765**	Mini Switch Monitor
VF5609	**53832-070**	Mini Disc Remote Indicator
VF5020		Remote Test Station for Duct Detectors – Alarm LED
VF5021		Remote Test Station for Duct Detectors – Alarm LED w/ Reset Button
VF5023		Remote Test Station for Duct Detectors – Alarm LED w/ Reset Key-Switch

Replacement Parts

The following VES replacement parts are provided for the Elite Panel:

MODELS	DESCRIPTION
VF1053-00	2 Loop Expansion Module
VF1170-00	eNet Interface
VF1150-00	Media Gateway
VF1151-00	Network Interface Card (NIC)
VF1153-00	Modem DACT Ethernet
VF1503-10	Enclosure Complete - Red
VF1503-20	Enclosure Complete - Gray
VF1504-10	Enclosure Door Only - Red
VF1504-20	Enclosure Door Only - Gray
VF1505-10	Enclosure Box Only - Red
VF1505-20	Enclosure Box Only - Gray
VF1506-00	Panel Mounting Plate
VF1507-00	Panel Key Lock Set
VF1508-00	Panel Bonding Strap
VF1509-00	Panel Grounding Block

MODELS	DESCRIPTION
VF1511-00	Panel Standoff Kit
VF1512-00	Panel Ribbon Cable Kit
VF1513-00	Panel Main AC Input Fuse
VF1514-00	Battery Leads & Jumper
VF3514-00	Elite Installation Manual
VF3618-00	Elite Door Label
VF1693-00	Operating Instructions, Elite Panel
VF1517-00	Resistor Kit (6) 10K Ohm
VF1544-00	EOL Resistor 10K
VF1518-00	Resistor Kit (8) Zero Ohm
VF1539-00	EOLD for NAC outputs only
VF1520-00	EOLD for municipal boxes
VF1610-00	Control Unit Board
VF1611-00	Panel Annunciator Board
VF1550-00	Ribbon Power Cable
VF1551-00	Data Cable
VF1552-00	Dual Telephone Cable
VF5450-00	Standby-Battery, 12 Volt, 7 AH, two per cabinet
VF5455-00	Battery Cabinet
VF8115-00	Power Supply, 120VAC and 240VAC, 24VDC, 4A
VF1172-10	eView, Annunciator, Red
VF1172-20	eView, Annunciator, Gray
VF1173-10	eView, Flush Mount Kit, Red
VF1173-20	eView, Flush Mount Kit, Gray
VF1171-00	16 Channel I/O Interface
VF13XX-YYY	The eMatrix is a graphical annunciator. Configure features of this device to assign numerical values to part number variables XX-YYY. Specify model number VF13XX-YYY for the base version of this unit. Reference eMatrix Installation Manual, VF3513-00 for configuration features for your application.

Compatible Notification Appliance Circuits

The following Notification Appliance Circuits are recommended for use with the Elite Panel in non-synchronized applications:

CHIMES	VES MODELS	DESCRIPTIONS	MANUFACTURERS
	VF4200-10	Sounder, Red	System Sensor
	VF4200-30	Sounder, White	System Sensor
	VF4202-10	Square, Red	Cooper Wheelock
	VF4202-30	Square, White	Cooper Wheelock
	VF4204-30	Round, White	Cooper Wheelock
STROBES			
	VF4360-10	Wall Mount, Red, Multi-Candela 15/30/75/110	System Sensor
	VF4360-30	Wall Mount, White, Multi-Candela 15/30/75/110	System Sensor
	VF4310-10	Wall Mount 15/75cd, Weatherproof	System Sensor
	VF4311-10	Wall Mount 75cd, Weatherproof	System Sensor
	VF4312-10	Wall Mount 110cd, Weatherproof	System Sensor
	VF4313-10	Ceiling Mount 15cd, Red	System Sensor
	VF4313-30	Ceiling Mount 15cd, White	System Sensor
	VF4315-10	Ceiling Mount 15/75cd, Red	System Sensor
	F4315-30	Ceiling Mount 15/75cd, White	System Sensor
	VF4317-10	Ceiling Mount 30cd, Red	System Sensor
	VF4317-30	Ceiling Mount 30cd, White	System Sensor
	VF4319-10	Ceiling Mount 75cd, Red	System Sensor
	VF4319-30	Ceiling Mount 75cd, White	System Sensor
	VF4321-10	Ceiling Mount 95cd, Red	System Sensor
	VF4321-30	Ceiling Mount 95cd, White	System Sensor

STROBES	VES MODELS	DESCRIPTIONS	MANUFACTURERS
	VF4323-10	Ceiling Mount 115cd, Red	System Sensor
	VF4323-30	Ceiling Mount 115cd, White	System Sensor
	VF4325-10	Ceiling Mount 177cd, Red	System Sensor
	VF4325-30	Ceiling Mount 177cd, White	System Sensor
	VF4327-10	Wall Mount, Red, Multi-Candela 15/30/75/110	Cooper Wheelock
	VF4327-30	Wall Mount, White, Multi-Candela 15/30/75/110	Cooper Wheelock
	VF4329-10	Wall Mount, Red, 15/75 cd	Cooper Wheelock
	VF4329-30	Wall Mount, White, 15/75cd	Cooper Wheelock
	VF4334-10	Ceiling Mount, Red, Multi-Candela 15/30/75/95	Cooper Wheelock
	VF4334-30	Ceiling Mount, White, Multi-Candela 15/30/75/95	Cooper Wheelock
	VF4335-10	Ceiling Mount, Round, Red, Multi-Candela 15/30/75/100	Cooper Wheelock
	VF4335-30	Ceiling Mount Round, White, Multi-Candela 15/30/75/100	Cooper Wheelock
	VF4336-10	Ceiling Mount, Red, Multi-Candela 115/177	Cooper Wheelock
	VF4336-30	Ceiling Mount, White, Multi-Candela 115/177	Cooper Wheelock
	VF4337-10	Ceiling Mount Round, Red, Multi-Candela 115/177	Cooper Wheelock
	VF4337-30	Ceiling Mount, Round, White, Multi-Candela 115/177	Cooper Wheelock

STROBES	VES MODELS	DESCRIPTIONS	MANUFACTURERS
	VF4338-10	Wall Mount, Red, Multi-Candela 135/185	Cooper Wheelock
	VF4338-30	Wall Mount, White, Multi-Candela 135/185	Cooper Wheelock
	VF4352-10	Wall Mount, Weather-proof, Red, 75cd	Cooper Wheelock
	VF4353-10	Wall Mount, Retrofit Plate, Red, Multi Candela 15/30/75/110	Cooper Wheelock
	VF4353-30	Wall Mount, Retrofit Plate, White, Multi Candela 15/30/75/110	Cooper Wheelock
	VF4355-10	Wall Mount, Retrofit Plate, Red, 15/75cd	Cooper Wheelock
	VF4359-10	Wall Mount, Retrofit Plate, Red, Multi Candela 135/185	Cooper Wheelock
	VF4660-10	Snap series strobe, multi-candela-wall, high intensity, 24 VDC, 135 / 185 CD, fire red	Cooper Wheelock
	VF4660-30	Snap series strobe, multi-candela-wall, high intensity, 24 VDC,135 / 185 CD, fire white	Cooper Wheelock
	VF4665-10	Snap series strobe, multi-candela-ceiling, high intensity, 24 VDC, 115 / 177 CD, fire red	Cooper Wheelock
	VF4665-30	Snap series strobe, multi-candela-ceiling, high intensity, 24 VDC, 115 / 177 CD, fire white	Cooper Wheelock

SPEAKERS	VES MODELS	DESCRIPTIONS	MANUFACTURERS
	VF4400-30	7 3/8" Round, White	System Sensor
	VF4401-10	5" Square, Red	System Sensor
	VF4401-30	5” Square, White	System Sensor
	VF4402-10	Trumpet Horn,15 Watt	Cooper Wheelock
	VF4403-10	Horn Loudspeaker, Red, Tap to 15 Watts	System Sensor
	VF4404-10	Square, 2 Watt, Red	Cooper Wheelock
	VF4404-30	Square, 2 Watt, White	Cooper Wheelock
	VF4407-30	Round, 2 Watt, White	Cooper Wheelock
	VF4408-10	Square, 8 Watt, Red	Cooper Wheelock
	VF4408-30	Square, 8 Watt, White	Cooper Wheelock
	VF4411-30	Round, 8 Watt, White	Cooper Wheelock
	VF4412-10	Vandal-Proof, 8 Watt, Surface, Red	Cooper Wheelock
	VF4412-30	Vandal-Proof, 8 Watt, Surface, White	Cooper Wheelock
	VF4414-10	Vandal-Proof, 8 Watt, Flush, Red	Cooper Wheelock
	VF4414-30	Vandal-Proof, 8 Watt, Flush, White	Cooper Wheelock
	VF4415-00	Ceiling Tile Support Bridge for 4" Speakers	Cooper Wheelock
	VF4407-10	Speaker, round, red	Cooper Wheelock
	VF4407-20	Speaker, round, nickel plated, ceiling	Cooper Wheelock
	VF4409-10	Speaker, wall or ceiling, round, red	Cooper Wheelock
	VF4409-30	Speaker, wall or ceiling, round, white	Cooper Wheelock
	VF4407-30	Speaker, wall or ceiling, round, white	Cooper Wheelock

SPEAKERS	VES MODELS	DESCRIPTIONS	MANUFACTURERS
	VF4405-10	Speaker, wall or ceiling, square, red	Cooper Wheelock
	VF4405-30	Speaker, wall or ceiling, square, white	Cooper Wheelock
HORNS			
	VF4100-10	Wall Mount, Red	System Sensor
	VF4100-30	Wall Mount, White	System Sensor
	VF4102-10	Wall Mount, Weather-proof, Red	System Sensor
	VF4103-10	Red	Cooper Wheelock
	VF4103-30	White	Cooper Wheelock
	VF4105-10	Weatherproof, Red	Cooper Wheelock
	VF4106-10	Red	Cooper Wheelock
	VF4106-30	White	Cooper Wheelock
	VF4108-10	Multi Tone, Flush, Red	Cooper Wheelock
	VF4108-30	Multi Tone, Flush, White	Cooper Wheelock
	VF4110-10	Multi Tone, Addressable, Red	Cooper Wheelock
	VF4110-30	Multi Tone, Addressable, White	Cooper Wheelock
	VF4620-10	Snap series horn, square, flush wall or ceiling,12 or 24 VDC, continuous or temporal (Code-3) with 90 or 95 dBA, red	Cooper Wheelock
	VF4620-30	Snap series horn, square, flush wall or ceiling 12 or 24 VDC, continuous or temporal (Code-3) with 90 or 95 dBA, white	Cooper Wheelock

HORN STROBES	VES MODELS	DESCRIPTIONS	MANUFACTURERS
	VF4535-10	Wall Mount, Red, Multi Candela 15/15/75/30/75/110 cd	System Sensor
	VF4535-30	Wall Mount, White, Multi Candela 15/15/75/30/75/110 cd	System Sensor
	VF4510-10	Ceiling Mount, Red, 15cd	System Sensor
	VF4510-30	Ceiling Mount, White, 15cd	System Sensor
	VF4512-10	Ceiling Mount, Red, 15/75cd	System Sensor
	VF4512-30	Ceiling Mount, White, 15/75cd	System Sensor
	VF4514-10	Ceiling Mount, Red, 30cd	System Sensor
	VF4514-30	Ceiling Mount, White, 30cd	System Sensor
	VF4516-10	Ceiling Mount, Red, 75cd	System Sensor
	VF4516-30	Ceiling Mount, White, 75cd	System Sensor
	VF4518-10	Ceiling Mount, Red, 95cd	System Sensor
	VF4518-30	Ceiling Mount, White, 95cd	System Sensor
	VF4520-10	Ceiling Mount, Red, 115cd	System Sensor
	VF4520-30	Ceiling Mount, White, 115cd	System Sensor
	VF4522-10	Ceiling Mount, Red, 177cd	System Sensor
	VF4522-30	Ceiling Mount, White, 177cd	System Sensor
	VF4524-10	Wall Mount, Weather-proof, 120VAC 15cd	System Sensor
	VF4525-10	Wall Mount, Weather-proof, 15/75cd	System Sensor
	VF4526-10	Wall Mount, Weather-proof,30cd	System Sensor

HORN STROBES	VES MODELS	DESCRIPTIONS	MANUFACTURERS
	VF4527-10	Wall Mount, Weatherproof, 75cd	System Sensor
	VF4528-10	Wall Mount, Weatherproof, 110cd	System Sensor
	VF4529-10	Wall Mount, Red, Multi Candela 15/30/75/110 cd	Cooper Wheelock
	VF4529-30	Wall Mount, White, Multi Candela 15/30/75/110 cd	Cooper Wheelock
	VF4531-10	Wall Mount, Flush, Red, 15/75cd	Cooper Wheelock
	VF4531-30	Wall Mount Flush, White, 15/75cd	Cooper Wheelock
	VF4532-10	Wall Mount, 4 Wire, Red, 15/30/75/110 cd	Cooper Wheelock
	VF4532-30	Wall Mount, 4 Wire, White, 15/30/75/110 cd	Cooper Wheelock
	VF4533-10	Wall Mount, 4 Wire, Red, 135/185 cd	Cooper Wheelock
	VF4533-30	Wall Mount, 4 Wire, White, 135/185 cd	Cooper Wheelock
	VF4600-10	Wall Mount, Red, Multi Candela 15/30/75/110 cd	Cooper Wheelock
	VF4600-30	Wall Mount, White, Multi Candela 15/30/75/110 cd	Cooper Wheelock
	VF4602-10	Wall Mount, Red, 15/75cd	Cooper Wheelock
	VF4602-30	Wall Mount, White, 15/75cd	Cooper Wheelock
	VF4604-10	Wall Mount, Weatherproof, Red, 75cd	Cooper Wheelock
	VF4605-10	Multi Tone/Strobe, Flush, Red, 15/75 cd	Cooper Wheelock
	VF4606-10	Multi Tone/Strobe, Flush, Red, 75 cd	Cooper Wheelock
	VF4607-10	Multi Tone/Strobe, Weatherproof, Red, 75 cd	Cooper Wheelock

HORN STROBES	VES MODELS	DESCRIPTIONS	MANUFACTURERS
	VF4608-10	Multi Tone/Strobe, Addressable, Red, 15/75cd	Cooper Wheelock
	VF4609-10	Multi Tone/Strobe, Addressable, Red, 75cd	Cooper Wheelock
	VF4610-10	Ceiling Mount, Red, Multi-Candela 15/30/75/95	Cooper Wheelock
	VF4610-30	Ceiling Mount, White, Multi-Candela 15/30/75/95	Cooper Wheelock
	VF4611-10	Ceiling Mount, Red, Multi-Candela 115/177	Cooper Wheelock
	VF4611-30	Ceiling Mount, White, Multi-Candela 115/177	Cooper Wheelock
	VF4612-10	Wall Mount, Red, Multi-Candela 135/185	Cooper Wheelock
	VF4612-30	Wall Mount, White, Multi-Candela 135/185	Cooper Wheelock
	VF4630-10	Snap series horn strobe, square, multi-candela-wall, 24 VDC, 15 / 30 / 75 / 110 CD, fire red	Cooper Wheelock
	VF4630-30	Snap series horn strobe, square, multi-candela-wall, 24 VDC, 15 / 30 / 75 / 110 CD, fire white	Cooper Wheelock
	VF4635-10	Snap series horn strobe, square, multi-candela-wall, high-intensity, 24 VDC, 135 / 185 CD, fire red	Cooper Wheelock
	VF4635-30	Snap series horn strobe, square, multi-candela-wall, high-intensity, 24 VDC, 135 / 185 CD, fire white	Cooper Wheelock

HORN STROBES	VES MODELS	DESCRIPTIONS	MANUFACTURERS
	VF4640-10	Snap series horn strobe, square, multi-candela-ceiling, 24 VDC, 15 / 30 / 75 / 95 CD, fire red	Cooper Wheelock
	VF4640-30	Snap series horn strobe, square, multi-candela-ceiling, 24 VDC, 15 / 30 / 75 / 95 CD, fire white	Cooper Wheelock
	VF4645-10	Snap series horn strobe, square, multi-candela-ceiling, high intensity, 24 VDC, 115 / 177 CD, fire red	Cooper Wheelock
	VF4645-30	Snap series horn strobe, square, multi-candela-ceiling, high intensity, 24 VDC, 115 / 177 CD, fire white	Cooper Wheelock
	VF4650-10	Snap series horn strobe, multi-candela-wall, 24 VDC, 15 / 30 / 75 / 110 CD, fire red	Cooper Wheelock
	VF4650-30	Snap series horn strobe, multi-candela-wall, 24 VDC, 15 / 30 / 75 / 110 CD, fire white	Cooper Wheelock
	VF4655-10	Snap series horn strobe, multi-candela-ceiling, 24 VDC, 15 / 30 / 75 / 95 CD, fire red	Cooper Wheelock
	VF4655-30	Snap series horn strobe, multi-candela-ceiling, 24 VDC, 15 / 30 / 75 / 95 CD, fire-white	Cooper Wheelock
	VF4534-10	Horn strobe, 24 VDC, multi-candela-ceiling, 15 / 30 / 75 / 95 CD, fire-red	Cooper Wheelock
	VF4534-30	Horn strobe, 24 VDC, multi-candela-ceiling, 15 / 30 / 75 / 95 CD, fire white	Cooper Wheelock

HORN STROBES	VES MODELS	DESCRIPTIONS	MANUFACTURERS
	VF4536-10	Horn strobe, 24 VDC, multi-candela-ceiling, high intensity, 115 / 177 CD, fire red	Cooper Wheelock
	VF4536-30	Horn strobe, 24 VDC, multi-candela-ceiling, high intensity, 115 / 177 CD, fire white	Cooper Wheelock
	VF4529-10	Horn strobe, 24 VDC, multi-candela-wall, 15 / 30 / 75 / 110 CD, fire-red	Cooper Wheelock
	VF4529-30	Horn strobe, 24 VDC, multi-candela-wall, 15 / 30 / 75 / 110 CD, fire-white	Cooper Wheelock
CHIME STROBES			
	VF4700-10	Red, 15cd	System Sensor
	VF4700-30	White, 15cd	System Sensor
	VF4702-10	Red, 15/75cd	System Sensor
	VF4702-30	White, 15/75cd	System Sensor
	VF4704-10	Red, 75cd	System Sensor
	VF4704-30	White, 75cd	System Sensor
	VF4706-10	Red, 110cd	System Sensor
	VF4706-30	White, 110cd	System Sensor
	VF4708-10	Square, Red, Multi Candela 15/30/75/110	Cooper Wheelock
	VF4708-30	White, Multi Candela 15/30/75/110	Cooper Wheelock
	VF4709-10	Square, Red, Multi Candela 135/185	Cooper Wheelock
	VF4709-30	Square, White, Multi Candela 135/185	Cooper Wheelock
	VF4712-10	Square, Red, 15/75cd	Cooper Wheelock
	VF4712-30	Square, White, 15/75cd	Cooper Wheelock
	VF4713-10	Ceiling, Round, Red, Multi Candela 15/30/75/95	Cooper Wheelock

CHIME STROBES	VES MODELS	DESCRIPTIONS	MANUFACTURERS
	VF4713-30	Ceiling, Round, White, Multi Candela 15/30/75/95	Cooper Wheelock
	VF4716-30	Ceiling, Round, White, Multi Candela 115/177	Cooper Wheelock
SPEAKER STROBES			
	VF4850-10	Wall Mount, Red, Multi Candela 15/1575/30/75/110 cd	System Sensor
	VF4850-30	Wall Mount, White, Multi Candela 15/1575/30/75/110 cd	System Sensor
	VF4810-30	Ceiling Mount, 15cd	System Sensor
	VF4811-30	Ceiling Mount, 15/75cd	System Sensor
	VF4812-30	Ceiling Mount, 30cd	System Sensor
	VF4813-30	Ceiling Mount, 75cd	System Sensor
	VF4814-30	Ceiling Mount, 95cd	System Sensor
	VF4815-30	Ceiling Mount, 115cd	System Sensor
	VF4816-30	Ceiling Mount, 177cd	System Sensor
	VF4817-10	Square, 2 Watt, Red, Multi Candela 15/30/75/110	Cooper Wheelock
	VF4817-30	Square, 2 Watt, White, Multi Candela 15/30/75/110	Cooper Wheelock
	VF4818-10	Square, 2 Watt, Red, Multi Candela 135/185	Cooper Wheelock
	VF4818-30	Square, 2 Watt, White, Multi Candela 135/185	Cooper Wheelock
	VF4819-10	Square, 2 Watt, Red, 15/75cd	Cooper Wheelock
	VF4819-30	Square, 2 Watt, White, 15/75cd	Cooper Wheelock
	VF4821-30	Round, 2 Watt, White, Multi Candela 15/30/75/95	Cooper Wheelock
	VF4822-30	Round, 2 Watt, White, Multi Candela 115/177	Cooper Wheelock

SPEAKER STROBES	VES MODELS	DESCRIPTIONS	MANUFACTURERS
	VF4826-10	Square, 8 Watt, Red, Multi Candela 15/30/75/110	Cooper Wheelock
	VF4826-30	Square, 8 Watt, White, Multi Candela 15/30/75/110	Cooper Wheelock
	VF4827-10	Square, 8 Watt, Red, Multi Candela 135/185	Cooper Wheelock
	VF4827-30	Square, 8 Watt, White, Multi Candela 135/185	Cooper Wheelock
	VF4828-10	Square, 8 Watt, Red, 15/75cd	Cooper Wheelock
	VF4828-30	Square, 8 Watt, White, 15/75cd	Cooper Wheelock
	VF4832-10	Square, 8 Watt, Red, Weatherproof, 75cd	Cooper Wheelock
	VF4833-30	Round, 8 Watt, White, Multi Candela 15/30/75/95	Cooper Wheelock
	VF4834-30	Round, 8 Watt, White, Multi Candela 115/177	Cooper Wheelock
	VF4840-10	Vandal-Proof, 8 Watt, Flush, Red, 15cd	Cooper Wheelock
	VF4840-30	Vandal-Proof, 8 Watt, Flush, White, 15cd	Cooper Wheelock
	VF4842-10	Vandal-Proof, 8 Watt, Flush, Red, 15/75cd	Cooper Wheelock
	VF4842-30	Vandal-Proof, 8 Watt, Flush, White, 15/75cd	Cooper Wheelock
	VF4844-10	Vandal-Proof, 8 Watt, Flush, Red, 30cd	Cooper Wheelock
	VF4844-30	Vandal-Proof, 8 Watt, Flush, White, 30cd	Cooper Wheelock
	VF4846-10	Vandal-Proof, 8 Watt, Flush, Red, 75cd	Cooper Wheelock
	VF4846-30	Vandal-Proof, 8 Watt, Flush, White, 75cd	Cooper Wheelock

SPEAKER STROBES	VES MODELS	DESCRIPTIONS	MANUFACTURERS
	VF4848-10	Vandal-Proof, 8 Watt, Flush, Red, 15/75cd	Cooper Wheelock
	VF4848-30	Vandal-Proof, 8 Watt, Flush, White, 15/75 cd	Cooper Wheelock
	VF4825-10	Speaker strobe, 24 VDC, 15 CD, semi-flush, wall, fire red	Cooper Wheelock
	VF4825-30	Speaker strobe, 24 VDC, 15 CD, semi-flush, wall, fire white	Cooper Wheelock
	VF4821-20	Speaker strobe, 24 VDC, multi-candela-ceiling, round 15 / 30 / 75 / 95 CD, fire nickel-plated	Cooper Wheelock
	VF4822-20	Speaker strobe, 24 VDC, multi-candela-ceiling, round, 15 / 30 / 75 / 95 CD, fire nickel-plated	Cooper Wheelock
	VF4821-30	Speaker strobe, 24 VDC, multi-candela-ceiling, round, 15 / 30 / 75 / 95 CD, fire white	Cooper Wheelock
	VF4821-10	Speaker strobe, 24 VDC, multi-candela-ceiling, round, 15 / 30 / 75 / 95 CD, fire red	Cooper Wheelock
	VF4822-30	Speaker strobe, 24 VDC, multi-candela-ceiling, high-intensity, round, 115 / 177 CD, fire white	Cooper Wheelock
	VF4829-30	Speaker strobe, 24 VDC, multi-candela-ceiling, round, 15 / 30 / 75 / 95 CD, fire white	Cooper Wheelock
	VF4824-10	Speaker strobe, 24 VDC, multi-candela-wall, high-intensity, 135 / 185 CD, fire red	Cooper Wheelock

SPEAKER STROBES	VES MODELS	DESCRIPTIONS	MANUFACTURERS
	VF4820-10	Speaker strobe, 24 VDC, multi-candela-wall, 15 / 30 / 75 / 110 CD, fire red	Cooper Wheelock
	VF4820-30	Speaker strobe, 24 VDC, multi-candela-wall, 15 / 30 / 75 / 110 CD, fire white	Cooper Wheelock
	VF4824-30	Speaker strobe, 24 VDC, multi-candela-wall, high-intensity, 135 / 185 CD, fire white	Cooper Wheelock
	VF4829-10	Speaker strobe, 24 VDC, multi-candela-ceiling, round, 15 / 30 / 75 / 95 CD, fire red	Cooper Wheelock
	VF4830-10	Speaker strobe, 24 VDC, multi-candela-ceiling, high intensity, round, 115 / 177 CD, fire red	Cooper Wheelock
	VF4830-30	Speaker strobe, 24 VDC, multi-candela-ceiling, high intensity, round, 115 / 177 CD, fire white	Cooper Wheelock
MINI-HORNS			
	VF4900-10	Pulsed Sounder, Red, 90dba	System Sensor
	VF4900-30	Pulsed Sounder, White, 90dba	System Sensor
	VF4902-30	Pulsed Sounder, Beige, 90dba	System Sensor
	VF4903-10	Pulsed Sounder, Red, 90dba w/"FIRE"	System Sensor
	VF4903-30	Pulsed Sounder, White, 90dba w/"FIRE"	System Sensor
	VF4905-30	Pulsed Sounder, Beige, 90dba w/"FIRE"	System Sensor
	VF4906-10	Mini Horn, Temporal/Continuous, Red	Cooper Wheelock
	VF4906-30	Mini Horn, Temporal/Continuous, White	Cooper Wheelock

Authorized Special Application Devices

MANUFACTURER	SYNC MODULE	HORN / STROBE	MAX NUMBER OF STROBES PER NAC OUTPUT	MAX LINE-IMPEDANCE
SYSTEM SENSOR	MDL	P1224MC	42 @ 2.5 A	2 OHMS
GENTEX	AVSMR	GEC3-24WR	32 @ 2.5 A	2 OHMS
GENTEX	AVS-44R	GEC3-24WR	32 @ 2.5 A	2 OHMS
WHEELOCK	DSM-24	RSS-24MCW	41 @ 2.5 A	2 OHMS
AMSECO	SMD10-3A	SH24W-153075	28 @ 2.5 A	2.5 OHMS

The values shown above for maximum number of strobes and line impedance are worst case conditions. Authorized special application devices have been tested with the Elite Panel for compliance with UL 864, 9th edition. The Elite Panel is suitable for single circuit synchronization only.

Compatible Devices for Auxiliary 24V

The following special application device is required for use on terminal connections 18 and 19 of Aux 24V:

VES MODEL	AUX 24 V	DESCRIPTION	MANUFACTURER
VF8300-00	Display and Annunciator	VESNet LCD Display	VES

This page intentionally left blank.

Appendix C
Calculations

This section describes current-loading and the process for determining the standby-battery rating and the NAC wiring length.

Current-Loading

Current-loading of the Elite Panel is limited to the capacity of the 4 Amp OEM 1 power supply. FACP installers must determine the loading placed on the power supply by adding the sum of device-loads to the no-load-alarm current of the Elite Panel. The result obtained from this calculation must be below 4 Amps of the 4 Amp OEM 1 power supply so that the Elite Panel can operate.

The power supply of the Elite is rated at 4 Amp OEM 1s where 1.25 Amps is reserved for charging the standby-batteries and 4 Amps is reserved for operating the control panel and external loads.
The 4 Amp reserve of the 4 Amp OEM 1 power supply is the maximum current capacity of the Elite Panel.
The control panel will not function properly if the operating current of 4 Amps is exceeded.

Current limits are provided in *Appendix A, "Specifications"* for each of the circuit-connections on the Elite Panel. Installers must identify the current-draw of each device on the circuit-connection and then compare the sum of these device-currents with the current limit provided for each of the circuit-connections. The total of device-currents must be below the limits provided in *Appendix A, "Specifications"* for each circuit-connection.

The calculation of total-current-loading must include the sum of device-loads on each of the Elite circuits.
Circuits to be included in this calculation for total-current-loading are:

- Panel standby and alarm currents
- SLC Loops
- NAC Outputs

The current limits provided in Appendix A, "Specifications" are maximums for each of the circuit-connections on the Elite Panel. These levels are not intended to be summed together to determine the total-current available from the Elite Panel. Refer to these levels only when determining the limit of device-loading on each circuit.

The following example demonstrates the process for determining the total load-current of the Elite Panel:

1 Identify the current-draw of each device on the circuit-connection.

2 Add the device-currents together in each circuit-connection.

3 Compare the sum of the device-currents with the current-limit of each circuit-connection to verify that the summed level is below the current-limit value.

4 Add the device-load-currents together that were obtained for each of the circuit-connections:

Circuit-Connection	**Current Limit**	**Device Load Current**
SLC Loop 1	250 mA	150 mA
SLC Loop 2	250 mA	50 mA
24V OUT	360 mA	0
AUX 24V	360 mA	0
NAC Channel 1	1.6 A continuous VDC or 900 mA pulse VDC	750 mA continuous VDC
NAC Channel 1	1.6 A continuous VDC or 900 mA pulse VDC	0
Total Device Load		950 mA

5 Add the Total Device Load to the no-load-alarm current of the Elite to obtain the Total-Load-Current.

Total Device Load + Elite No-Load = Total-Load-Current

950 mA + 200 mA = 1.15 A

Total Load Current: 1.15 A

6 Verify that the current level is below 4 Amps:

1.15 A < 4 A

This example demonstrates that device-loading *does not exceed* the current capacity of the Elite power supply.

Determining the Standby-Battery Rating

This section provides guidelines for determining the standby-battery rating of the Elite Panel.

Battery Rating Equation

The equation below describes the process for determining the Amp-Hour Rating of the standby-batteries:

Battery Rating = (Battery Derating Factor) x [(Standby Amp Hours) + (Alarm Amp Hours)]

Or

Battery Rating = (Battery Derating Factor) x [(24 Hours x Standby-Current) + (5 Minutes x alarm current)]

Where the Battery Derating Factor = 1.2 and 5 minutes = 5 / 60 minutes = 1/12 = .0833 hours.

To determine the battery Amp-Hour-Rating:

1. Record the standby and alarm currents of VES Devices.
2. Record the standby and alarm currents of NAC Devices.
3. Record the standby and alarm currents of Auxiliary Devices.
4. Total the standby and alarm currents of SLC 1, SLC 2, NAC 1, NAC 2, AUX 24V and 24V OUT.
5. Calculate the Total Standby Amp Hours.
6. Calculate the Total Alarm Amp Hours.
7. Determine Total Amp-Hours by adding the Total Standby Amp Hours with the Total Alarm Amp Hours.
8. Determine the minimum Amp-Hour-Rating for the battery by multiplying the Total Amp-Hours with the Derating Factor (1.20).
9. Select a battery with a rating equal to or greater than the minimum Amp-Hour-Rating determined in step 8.

Complete the worksheets on the following pages to tabulate the total-current-load of the FACP system and to determine the minimum Amp-Hour-Rating for the standby-batteries.

Compare the sum of currents drawn by devices of the system and compare these to the values listed in the table of Appendix C. Select a corresponding standby-battery based on this comparison.

Devices

Description	Quantity	Device State	Device Current (Amps)	Total Current (Amps)
Elite Panel - 1 Loop		Standby	200 mA	
		Alarm	200 mA	
Optical Smoke Sensor		Standby		
		Alarm		
Ion Smoke Sensor		Standby		
		Alarm		
95A Heat Sensor		Standby		
		Alarm		
Two-Wire Duct Detector		Standby		
		Alarm		
Four-Wire Duct Detector		Standby		
		Alarm		
95A Sounder Control Module		Standby		
		Alarm		
Mini Switch Monitor		Standby		
		Alarm		

Description	Quantity	Device State	Device Current (Amps)	Total Current (Amps)
95A Switch Monitor Module		Standby		
		Alarm		
95A Relay Output Module		Standby		
		Alarm		
95A Isolator		Standby		
		Alarm		
Total Standby				
Total Alarm				
Total Current				

NAC Devices

NAC DeviceS	Total Standby Current (Amps)	Total Alarm Current (Amps)
NAC 1		
NAC 2		
NAC 3		
NAC 4		

Auxiliary Devices

DeviceS	Total Standby Current (Amps)	Total Alarm Current (Amps)
Total Current		

Tabulating Data

	Category	Instruction	Standby-Current	Alarm-Current
1	VES Devices	Enter the total standby and alarm current for VES Devices.	Amps	Amps
2	NAC Devices	Enter the total standby and alarm current for NAC Devices.	Amps	Amps
3	Auxiliary Devices	Enter the total standby and alarm current for Auxiliary Devices.	Amps	Amps
4	Total Standby and Alarm Current	Total the Standby Current of steps 1, 2 and 3. Total the Alarm Current of steps 1, 2 and 3.	Amps	Amps
5	Total Standby Time	Enter a Total Standby Time of 24 or 60 hours.	Hours	
6	Total Standby Amp-Hours	Multiply the Total Standby Time of step 5 by the Total Standby Current of step 4.	AH	
7	Total Alarm Time	Enter a Total Alarm Time in hours, where 5 minutes = .083 hours and 15 minutes = .25 hours.		Hours
8	Total Alarm Amp Hours	Multiply the Total Alarm Time in step 7 with the Total Alarm Current of step 4.		AH
9	Total Amp-Hours	Add the Total Alarm Amp Hours of step 8 with the Total Standby Amp Hours of step 6.		AH
10	Derating factor	The Derating Factor is 1.20.		1.20
11	Minimum Battery Amp-Hour Rating	Multiply the Derating Factor of step 10 (1.20) by the Total Amp-Hours of step 9. The Amp-Hour-Rating of the battery selected must be equal to or greater than the minimum Amp-Hour-Rating obtained in this step. Note: The Maximum battery size is 52.		AH

NAC Wiring Length

Determine the maximum wire length that can safely operate Notification Appliances under worst case conditions. To determine the maximum wire length under worst case conditions:

1. Identify the minimum operating-voltage (Vop_{min}) of Notification Appliances on the NAC channel.
2. Calculate the maximum current of the circuit (I_{max}).
3. Identify the wire-resistance-per-foot of the circuit (R_{wire}).
4. Calculate the maximum wire length (L_{max}) of the circuit.

Sample L_{max} Calculation

Determine the maximum wire length (L_{max}) for three Notification Appliances on NAC channel 1 where,

- The manufacturer data sheet for the strobe indicates that the minimum operating-voltage (Vop_{min}) is 16 VDC.
- The manufacturer data sheet for the strobe indicates that the maximum current-draw (I_{strobe}) is 209mA DC.
- The circuit connection is provided with 18 AWG solid-copper-wire.
- The EOLD in the circuit is 10K Ohms.

To determine the maximum wire length (L_{max}) of this circuit:

1. Identify the minimum operating-voltage (Vop_{min}) of the strobe from the manufacturer data sheet.
   From the manufacturer data sheet:

   $V_{opmin} = 16$ VDC

2. Calculate the total current of the parallel devices in the circuit (I_{total})where,

   $[\ I_{total} = I_{strobe\_1} + I_{strobe\_2} + I_{strobe\_3} + (Vop_{min} / EOLD)\ ]$

   $= [\ (\ .209 + .209 + .209 + 16 / 10K\ )\ ]$ A

   $= (\ .627 + .0016\ )$ A

   $I_{total} = .6286$ A

3 Identify the maximum resistance of the wire gage used in the circuit ($R_{wiremax}$) when using 18 AWG copper. An 18 AWG solid copper wire is 6.385 Ohms at 1000FT using the Resistance Table below:

Gage	Resistance / 1000Ft @ 68F	R_{wire}
18 AWG	**6.385 Ohms**	**0.006385 Ohms / FT**
16 AWG	4.016 Ohms	0.004016 Ohms / FT
14 AWG	2.525 Ohms	0.002525 Ohms / FT

4 The calculation for the minimum output voltage of the NAC is:

$V_{outmin} = V_{panel} \times 85\%$

$= 24 \text{ VDC} \times 85\%$

$V_{outmin} = 20.4 \text{ VDC}$

5 The calculation for voltage-drop across the length of the wire is:

$V_{drop} = V_{outmin} - V_{opmin}$

$= 20.4 \text{ VDC} - 16 \text{ VDC}$

$V_{drop} = 4.4 \text{ VDC}$

6 The calculation for maximum wire length of this circuit is:

$L_{max} = 1/2 (V_{drop} / I_{max}) / R_{wire}$

where,

$= 1/2 \; [\; (4.4 \; / .6286 \;) \; / \; (.006385 \text{ Ohms / FT}) \;]$

$L_{max} = 548 \text{ FT}$

The figure below illustrates an example circuit for determining maximum wire length where values are provided for minimum operating-voltage of the NAC channel output (Vopmin), maximum current of the circuit (Imax), wire-resistance-per-foot of the circuit (Rwire) and maximum current-draw of the strobe (Istrobe):

Figure C-1
Example Circuit For Determining Maximum Wire Length

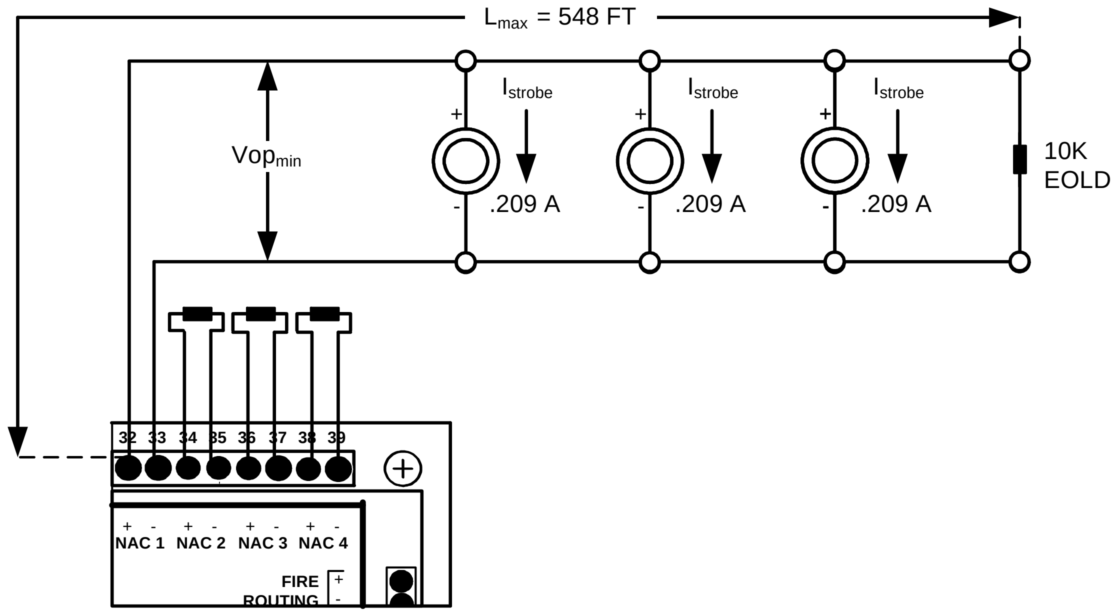
L_{max} = 548 FT
I_{strobe}
I_{strobe}
I_{strobe}
Vop_{min}
+
-
.209 A
+
-
.209 A
+
-
.209 A
10K
EOLD
32 33 34 35 36 37 38 39
+ - + - + - + -
NAC 1 NAC 2 NAC 3 NAC 4
FIRE
ROUTING
+
-

This page intentionally left blank.

WIRING DIAGRAM FOR THE ELITE A-SERIES PANEL

FOR INDOOR DRY USE ONLY

PATENT PENDING

MODEL NUMBER CROSS REFERENCE TABLE

SOURCE	CONTROL UNIT BOARD	PANEL ANNUNCIATOR BOARD	5.25 AMP POWER SUPPLY	2-LOOP EXPANSION MODULE
VES MODEL NUMBER	VF1610-00	VF1611-00	VF8115-00: 120 VAC and 240 VAC	VF1053-00
PRODUCT CODE	S551VE9	S550VE9	PLASY-000105	S552VE9
CIRCUIT BOARD STAMP	K6002, ISSUE 10	K6001, ISSUE 13	PCB-000014	K6004, ISSUE 07

CONTROL UNIT BOARD, VF1500-00

TOP-TERMINAL (X1) RATINGS

SLC LOOPS

TERMINAL	CONNECTION	RATING
1	LOOP 1 (- OUT)	32VDC @ 400mA
2	LOOP 1 (+ OUT)	32VDC @ 400mA
3	LOOP 1 (- IN)	32VDC @ 400mA
4	LOOP 1 (+ IN)	32VDC @ 400mA
5	LOOP 2 (- OUT)	32VDC @ 400mA
6	LOOP 2 (+ OUT)	32VDC @ 400mA
7	LOOP 2 (- IN)	32VDC @ 400mA
8	LOOP 2 (+ IN)	32VDC @ 400mA
9	LOOP 3 (- OUT)	32VDC @ 400mA
10	LOOP 3(+ OUT)	32VDC @ 400mA
11	LOOP 3 (- IN)	32VDC @ 400mA
12	LOOP 3 (+ IN)	32VDC @ 400mA
13	LOOP 4 (- OUT)	32VDC @ 400mA
14	LOOP 4 (+ OUT)	32VDC @ 400mA
15	LOOP 4 (- IN)	32VDC @ 400mA
16	LOOP 4 (+ IN)	32VDC @ 400mA

RELAY CONTACTS

PROGRAMMABLE		
[illegible]	FIRE 1 (NC) NOT SUPERVISED	30VDC @ 1A, 1PF
[illegible]	FIRE 1 (C) NOT SUPERVISED	30VDC @ 1A, 1PF
[illegible]	FIRE 1 (NO) NOT SUPERVISED	30VDC @ 1A, 1PF
[illegible]	TROUBLE (NC) NOT SUPERVISED	30VDC @ 1A, 1PF
[illegible]	TROUBLE (C) NOT SUPERVISED	30VDC @ 1A, 1PF
[illegible]	TROUBLE (NO) NOT SUPERVISED	30VDC @ 1A, 1PF
[illegible]	FIRE 2 (NC) NOT SUPERVISED	30VDC @ 1A, 1PF
[illegible]	FIRE 2 (C) NOT SUPERVISED	30VDC @ 1A, 1PF
[illegible]	FIRE 2 (NO) NOT SUPERVISED	30VDC @ 1A, 1PF
[illegible]	SUPERVISORY (NC) NOT SUPERVISED AND NOT PROGRAMMABLE	30VDC @ 1A, 1PF
[illegible]	SUPERVISORY (C) NOT SUPERVISED AND NOT PROGRAMMABLE	30VDC @ 1A, 1PF
[illegible]	SUPERVISORY (NO) NOT SUPERVISED AND NOT PROGRAMMABLE	30VDC @ 1A, 1PF
SUPERVISORY RELAY-CONTACTS CANNOT BE PROGRAMMED FOR OPERATIONS OTHER THAN SUPERVISORY FUNCTIONS		
[illegible]	AUXILIARY (NC) NOT SUPERVISED	30VDC @ 1A, 1PF
[illegible]	AUXILIARY (C) NOT SUPERVISED	30VDC @ 1A, 1PF
[illegible]	AUXILIARY (NO) NOT SUPERVISED	30VDC @ 1A, 1PF

SPECIAL APPLICATION OUTPUTS

PROGRAMMABLE		
32	NAC 1 (+)	(19.3 – 25.95) VDC @ 2.5 A
33	NAC 1 (-)	(19.3 – 25.95) VDC @ 2.5 A
34	NAC 2 (+)	(19.3 – 25.95) VDC @ 2.5 A
35	NAC 2 (-)	(19.3 – 25.95) VDC @ 2.5 A
36	NAC 3 (+)	(19.3 – 25.95) VDC @ 2.5 A
37	NAC 3 (-)	(19.3 – 25.95) VDC @ 2.5 A
38	NAC 4 (+)	(19.3 – 25.95) VDC @ 2.5 A
39	NAC 4 (-)	(19.3 – 25.95) VDC @ 2.5 A
SUITABLE FOR SINGLE-CIRCUIT SYNCHRONIZATION ONLY		

SIDE-TERMINAL (X2) RATINGS

POWER OUTPUT CIRCUITS

TERMINAL	CONNECTION	RATING
1	FIRE ROUTING (+)	24 VDC @ 500mA
2	FIRE ROUTING (-)	24 VDC @ 500mA
3	TROUBLE ROUTING (+)	24 VDC @ 500mA
4	TROUBLE ROUTING (-)	24 VDC @ 500mA
5	PROGRAMMABLE OUTPUT (+)	24 VDC @ 500mA
6	PROGRAMMABLE OUTPUT (-)	24 VDC @ 500mA

THE OUTPUT CONNECTIONS OF FIRE ROUTING, TROUBLE ROUTING AND PROGRAMMABLE OUTPUT ARE SUPERVISED AND REGULATED AT 24 VDC. THE PROGRAMMABLE OUTPUT PROVIDES A SPECIAL APPLICATION OUTPUT IN THE RANGE OF 21.37 TO 25.9 VDC WHEN OPERATING SOLENOID DEVICES. THESE OUTPUT CONNECTIONS ARE COMMON, ZONAL AND PROGRAMMABLE.

UNSUPERVISED INPUTS

7	TROUBLE (TBL)	24VDC @ 2.4mA INPUT RATING
8	RESET (RES)	24VDC @ 2.4Ma INPUT RATING
9	AUXILIARY (INT)	24VDC @ 2.4mA INPUT RATING
10	EMERGENCY (CNT)	24VDC @ 2.4mA INPUT RATING
11	SILENCE (SIL)	24VDC @ 2.4mA INPUT RATING
12	COMMON (0V)	24VDC @ 2.4mA INPUT RATING
13	PROGRAMMABLE INPUT 1 (PR1)	24VDC @ 2.4mA INPUT RATING
14	PROGRAMMABLE INPUT 1 (PR2)	24VDC @ 2.4mA INPUT RATING
15	PROGRAMMABLE INPUT 1 (PR3)	24VDC @ 2.4mA INPUT RATING

RS485 SERIAL BUS

16	COMMS (+)	(+) DATA
17	COMMS (-)	(-) DATA

AUXILIARY 24 VDC

18	POSITIVE (+)	24 VDC @ 500mA
19	NEGATIVE (-)	24 VDC @ 500mA

THE AUX 24 VDC CONNECTION IS A COMMON OUTPUT AND PROVIDES A REGULATED 24 VDC OUTPUT. THIS CONNECTION PROVIDES A SPECIAL APPLICATION OUTPUT IN THE RANGE OF 21.37 TO 25.9 VDC WHEN OPERATING A SOLENOID DEVICE.

eNET TERMINALS

20	NETWORK IN (+)	(+) DATA
21	NETWORK IN (-)	(-) DATA
22	NETWORK OUT (+)	(+) DATA
23	NETWORK OUT (-)	(-) DATA

SYNCHRONIZED NOTIFICATION APPLIANCES

AUDIBLE	THE INSTALLATION OF SYNCRONIZED-AUDIBLE NOTIFICATION APPLICANCES ON ONE NAC OUTPUT SHALL NOT BE INSTALLED IN HEARING RANGE OF ANOTHER GROUP OF SYNCRONIZED-AUDIBLE NOTIFICATION APPLIANCES ON ANOTHER NAC OUTPUT.
VISUAL	THE INSTALLATION OF SYNCRONIZED-VISUAL NOTIFICATION APPLICANCES ON ONE NAC OUTPUT SHALL NOT BE INSTALLED IN LINE-OF-SIGHT OF ANOTHER GROUP OF SYNCRONIZED-VISUAL NOTIFICATION APPLIANCES ON ANOTHER NAC OUTPUT.

AUTHORIZED SPECIAL APPLICATION DEVICES

MANUFACTURER	SYNC MODULE	HORN/STROBE	MAXIMUM NUMBER OF STROBES PER NAC OUTPUT	MAXIMUM CIRCUIT-LINE-IMPEDANCE
SYSTEM SENSOR	MDL	P2[illegible]	42 @ 2.5 A	3 OHMS
[illegible]	[illegible]	[illegible]	[illegible]	[illegible]
GENTEX	AVS-EIR	GEC3-24WR	30 @ 2.5 A	3 OHMS
[illegible]	[illegible]	[illegible]	[illegible]	[illegible]
AMSECO	SMD10-3A	SH24W-153075	29 @ 2.5 A	2.6 OHMS

AUTHORIZED SPECIAL APPLICATION DEVICES HAVE BEEN TESTED WITH THE ELITE PANEL FOR COMPLIANCE WITH UL 864, 9th EDITION

ALARM TIME-LIMIT

ALARM TIME-LIMIT CUT-OUT IS ______.

COMMUNICATION DEVICES

eLAN DEVICES	MODEL NUMBER
MEDIA GATEWAY	VF1150
NIC	VF1151
MODEM-DACT ETHERNET	VF1153
eNET NETWORK	**MODEL NUMBER**
eNET INTERFACE	VF1170
RS485 DEVICES	**MODEL NUMBER**
16 CHANNEL I/O INTERFACE	VF1171
eView	VF1172 / VF1173
eMATRIX	PART NUMBER VF13XX-YYY DETERMINED BY FEATURES. REFERENCE INSTALLATION MANUAL, VF3513.

WIRE LENGTH

SLC DEVICE WIRING LENGTH MUST NOT EXCEED:
- **10,000 FT FOR 14 AWG**
- **6,200 FT FOR 16 AWG**
- **3,900 FT FOR 18AWG.**

RECOMMENDED WIRE GAGE

CONNECTIONS	GAUGE (AWG)
TB6 - AC INPUT	14 THROUGH 12
TB4 - 24 VDC	18 THROUGH 12
TB3 - BATTERY	18 THROUGH 12

GROUND FAULT INDICATION

A GROUND FAULT INDICATION OCCURS ON MODELS OF THE ELITE PANEL WHEN A MINIMUM OF 30K OHMS EXISTS BETWEEN EARTH-GROUND AND EITHER DC RTN or +24 DC OF THE POWER-SUPPLY.

INSTALLATION REQUIREMENTS

INSTALL MODELS OF THE ELITE A-SERIES PANEL IN ACCORDANCE WITH THE FOLLOWING DOCUMENTS WHEN OPERATING ON THE VESNet:

- ELITE PANEL INSTALLATION MANUAL, A-SERIES, VF3514-00, REV. E02.XX
- MODEM-DACT ETHERNET INSTALLATION MANUAL, VF1628-00, REV. E02.XX
- MEDIA GATEWAY INSTALLATION MANUAL, VF1627-00, REV. E02.XX
- NETWORK INTERFACE CARD (NIC) INSTALLATION MANUAL, VF1629-00, REV. E02.XX
- 16 CHANNEL I/O INTERFACE INSTALLATION MANUAL, VF3512-00, REV. E01.XX
- eVIEW INSTALLATION MANUAL, VF3510-00, REV. E01.XX
- eMATRIX INSTALLATION MANUAL, VF3513-00, REV. E01.XX

INSTALL MODELS OF THE ELITE A-SERIES PANEL IN ACCORDANCE WITH THE FOLLOWING DOCUMENTS WHEN OPERATING ON THE eNET:

- ELITE PANEL INSTALLATION MANUAL, A-SERIES, VF3514-00, REV. E02.XX
- eNET INTERFACE INSTALLATION MANUAL, VF3511-00, REV. E01.XX
- 16 CHANNEL I/O INTERFACE INSTALLATION MANUAL, VF3512-00, REV. E01.XX
- eView INSTALLATION MANUAL, VF3510-00, REV. E01.XX
- eMATRIX INSTALLATION MANUAL, VF3513-00, REV. E01.XX

AGENCY LISTING REQUIREMENTS

NFPA

Install in accordance with NFPA 13 and NFPA 72. The VES Elite A Panel is suitable as follows:

- Local Signaling Unit
- Types of signaling services are automatic fire alarm, manual fire alarm, waterflow alarm and sprinkler supervisory.
- Style 4, 6 or 7 for Signaling Line Circuits
- Style Y for Notification Appliance Circuits
- Non-coded Signaling, DACT requires Modem-DACT
- Remote Station (RS) Protected Premises Unit (PPU) provides VESNet Communication on Elite A models (VF1461, VF1481) containing the Modem-DACT, on Elite A models (VF1464, VF1484) containing the Modem-DACT Ethernet or on Elite A models (VF1461, VF1481) containing the Media Gateway
- Central Station (CS) Protected Premises Unit (PPU) provides VESNet Communication on Elite A models (VF1463, VF1483) containing the Modem-DACT, on Elite A models (VF1464, VF1484) containing the Modem-DACT Ethernet or on Elite A models (VF1461, VF1481) containing the Media Gateway
- Elite A Models (VF1462, VF1482) containing the NIC, must be connected (networked) to the VESNet with Elite A models (VF1461, VF1481) containing the Media Gateway to communicate to a Remote Station Protected Premises Unit, Proprietary Protected Premises Unit or Central Station Protected Premises Unit. The VESNet LCD Display (VF8300) with or without the LED Add-On Annunciator (VF8203) may also be connected to the VESNet (networked) with the above Elite A models
- Proprietary (P) Protected Premises Unit (PPU) provides VESNet Communication on Elite A models (VF1461, VF1481) containing the Modem-DACT, on Elite A models (VF1464, VF1484) containing the Modem-DACT Ethernet or on Elite A models (VF1461, VF1481) containing the Media Gateway
- Remote Station (RS) Protected Premises Unit (PPU) provides eNet Communication on Elite A models (VF1461, VF1481) containing the Modem-DACT or on Elite A models (VF1464, VF1484) containing the Modem-DACT Ethernet
- Central Station (CS) Protected Premises Unit (PPU) provides eNet Communication on Elite A models (VF1461, VF1481) containing the Modem-DACT or on Elite A models (VF1464, VF1484) containing the Modem-DACT Ethernet
- Proprietary (P) Protected Premises Unit (PPU) provides eNet Communication on Elite A models (VF1461, VF1481) containing the Modem-DACT or on Elite A models (VF1464, VF1484) containing the Modem-DACT Ethernet

FCC

THIS DEVICE COMPLIES WITH PART 15 OF THE FCC RULES.
OPERATION IS SUBJECT TO THE FOLLOWING TWO CONDITIONS:

(1) THIS DEVICE MAY NOT CAUSE HARMFUL INTERFERENCE, AND
(2) THIS DEVICE MUST ACCEPT ANY INTERFERENCE RECEIVED, INCLUDING INTERFERENCE THAT MAY CAUSE UNDESIRED OPERATION.

WARNING!

⚠ THIS UNIT INCLUDES AN OPTIONAL ALARM VERIFICATION FEATURE THAT WILL RESULT IN A DELAY OF THE SYSTEM ALARM SIGNAL FROM THE INDICATED CIRCUITS. THE TOTAL DELAY TIME (CONTROL PLUS SMOKE DETECTORS) SHALL NOT EXCEED 60 SECONDS. NO OTHER SMOKE DETECTOR SHALL BE CONNECTED TO THESE CIRCUITS UNLESS APPROVED BY THE LOCAL AUTHORITY HAVING JURISDICTION.
*ZONE(S)____
*WHERE ALARM VERIFICATION IS USED.
CONFIRMATION PERIOD SHALL BE A MINIMUM OF 60 SECONDS.

4 AMP OEM1 POWER SUPPLY LED STATUS INDICATORS

LED	NORMAL	FAULT	RECOMMENDED ACTION FOR FAULT CONDITION
AC NORM	GREEN	OFF	CHECK FUSE F2, SOURCE POWER AND INPUT WIRING (TB6).
EARTH FAULT	OFF	YELLOW	REMOVE AND REPLACE RIBBON POWER CABLE, VF1550-00 FROM EACH OF THE THREE SOCKETS WHILE POWERED. IF THE FAULT CLEARS WHEN THE CABLE IS REMOVED CHECK THE DEVICE AT THE SOCKET LOCATION.
GENTBL CRGFLT	OFF	YELLOW	CHECK WIRING INTEGRITY TO THE STANDBY BATTERIES. REPLACE THE BATTERIES. THIS LED CONDITION CAN ALSO BE RELATED TO AN INTERNAL FAULT ON THE 4 AMP POWER SUPPLY.
BAT LOW	OFF	YELLOW	CHECK THE CONDITION OF THE BATTERIES. BATTERY VOLTAGE MAY BE BELOW 24 VDC. THIS LED CONDITION MAY OCCUR WHEN BATTERIES ARE LOW.
BAT DISCON	OFF	YELLOW	CHECK WIRING INTEGRITY AND POLARITY TO THE STANDBY BATTERIES.
HEART BEAT	FLASHING YELLOW	NOT FLASHING	INTERNAL FAULT CONDITION. DISCONNECT BATTERIES AND CYCLE THE POWER INPUT FEEDING THE 4 AMP POWER SUPPLY AT TB6
DC OUTON	GREEN	OFF	REMOVE AND REPLACE RIBBON POWER CABLE, VF1550-00 FROM EACH OF THE THREE SOCKETS WHILE POWERED. IF THE FAULT CLEARS WHEN THE CABLE IS REMOVED CHECK THE DEVICE AT THE SOCKET LOCATION.

4 AMP OEM1 POWER SUPPLY CONNECTOR DESCRIPTIONS

1	TB6 - INPUT FOR AC EARTH GROUND CONNECTIONS.
2	TB6 – INPUT FOR AC NEUTRAL CONNECTIONS (N).
3	TB6 - INPUT FOR AC LINE CONNECTIONS (L).
4	F2 – 3 A, 250 VAC, SLOW BLOW, 5 x 20mm FUSE
5	TB4 - DC OUTPUT FOR +24 VDC CONNECTIONS.
6	TB4 – DC OUTPUT FOR DC RTN CONNECTIONS.
7	TB3 - (-) BATTERY CONNECTION.
8	TB3 - (+) BATTERY CONNECTION.
9	STATUS LEDS: AC NORM, EARTH FAULT, GENTBL CRGFLT, BAT LOW, BAT DISCON, HEART BEAT, DC OUTON.

4 AMP OEM1 POWER SUPPLY SPECIFICATIONS

FUSE	3A, 250VAC, SLOW-BLOW, 5 x 20mm
INPUT (SUPERVISED)	120 or 240 VAC 50/60Hz
OUTPUT VOLTAGE	24 VDC +10%, -15% REGULATION OVER ENTIRE LOAD RANGE.
OUTPUT CURRENT	0 - 4 AMPS
CHARGE CURRENT	FAST CHARGE: 1.25 A TRICKLE CHARGE: 1.25 A VOLTAGE LIMITED
BATTERY-TYPE	TWO SERIES 12 VDC SLA STANDBY BATTERIES
TRANSFER VOLTAGE	VF8115-00: 120 VAC TRANSFER @ 75 VAC 240 VAC TRANSFER @ 160 VAC

4 AMP OEM1 POWERSUPPLY CONNECTOR SPECIFICATIONS

CONNECTOR	TERMINAL	DESCRIPTION	RATINGS	
			VOLTAGE	CURRENT
TB6	G	EARTH GROUND	N/A	N/A
	N	AC NEUTRAL	120 VAC, 50/60Hz	2.1 A
			240 VAC, 50/60Hz	1.1 A
	L	AC LINE	120 VAC, 50/60Hz	2.1 A
			240 VAC, 50/60Hz	1.1 A
TB4	+ 24 VDC	+ 24 VDC	+ 24 VDC	0 – 4 AMPS
	DC RTN	DC RTN	- 24 VDC	0 – 4 AMPS
TB3	+	+ 24 VDC	+ 24 VDC	5 A
	-	DC RTN	- 24 VDC	5 A

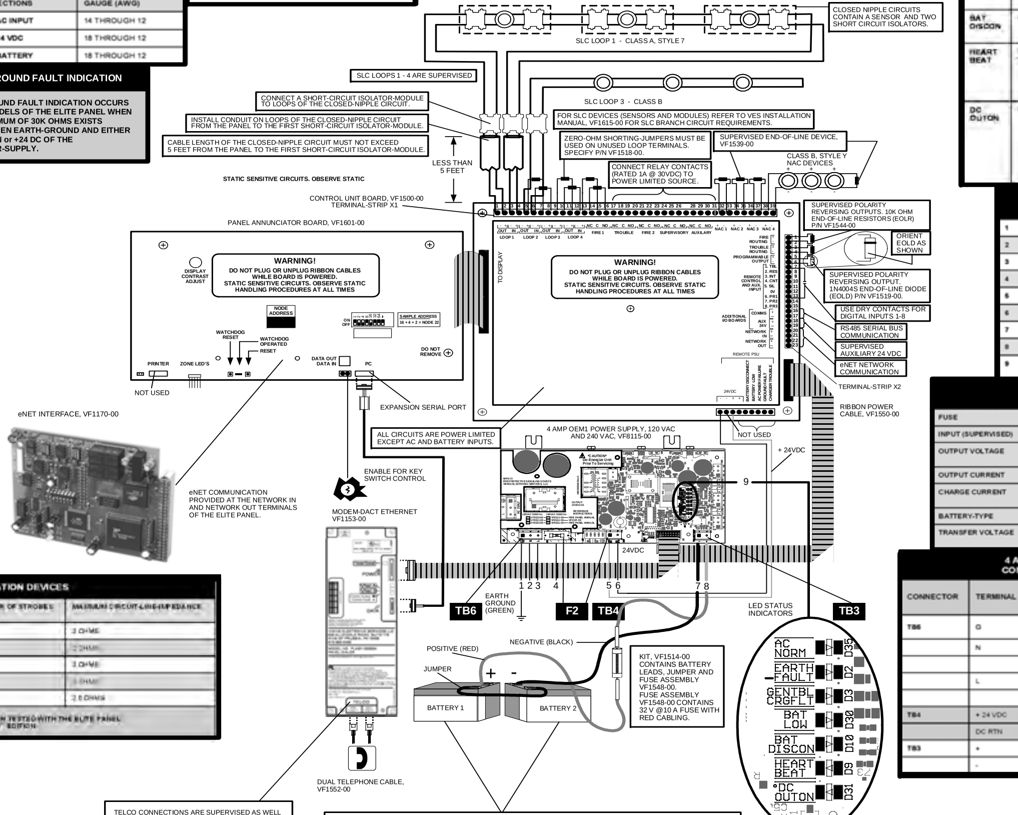
CLOSED NIPPLE CIRCUITS CONTAIN A SENSOR AND TWO SHORT CIRCUIT ISOLATORS.
SLC LOOP 1 - CLASS A, STYLE 7
SLC LOOPS 1 - 4 ARE SUPERVISED
SLC LOOP 3 - CLASS B
CONNECT A SHORT-CIRCUIT ISOLATOR-MODULE TO LOOPS OF THE CLOSED-NIPPLE CIRCUIT.
INSTALL CONDUIT ON LOOPS OF THE CLOSED-NIPPLE CIRCUIT FROM THE PANEL TO THE FIRST SHORT-CIRCUIT ISOLATOR-MODULE.
CABLE LENGTH OF THE CLOSED-NIPPLE CIRCUIT MUST NOT EXCEED 5 FEET FROM THE PANEL TO THE FIRST SHORT-CIRCUIT ISOLATOR-MODULE.
LESS THAN 5 FEET
FOR SLC DEVICES (SENSORS AND MODULES) REFER TO VES INSTALLATION MANUAL, VF1615-00 FOR SLC BRANCH CIRCUIT REQUIREMENTS.
ZERO-OHM SHORTING-JUMPERS MUST BE USED ON UNUSED LOOP TERMINALS. SPECIFY P/N VF1518-00.
SUPERVISED END-OF-LINE DEVICE, VF1539-00
CLASS B, STYLE Y NAC DEVICES
CONNECT RELAY CONTACTS (RATED 1A @ 30VDC) TO POWER LIMITED SOURCE.
STATIC SENSITIVE CIRCUITS. OBSERVE STATIC
CONTROL UNIT BOARD, VF1500-00 TERMINAL-STRIP X1
PANEL ANNUNCIATOR BOARD, VF1601-00
DISPLAY CONTRAST ADJUST
WARNING!
DO NOT PLUG OR UNPLUG RIBBON CABLES WHILE BOARD IS POWERED. STATIC SENSITIVE CIRCUITS. OBSERVE STATIC HANDLING PROCEDURES AT ALL TIMES
NODE ADDRESS
ON OFF
SAMPLE ADDRESS 16 + 4 + 2 = NODE 22
WATCHDOG RESET
WATCHDOG OPERATED RESET
DO NOT REMOVE
PRINTER
ZONE LED'S
NOT USED
DATA OUT DATA IN
PC
EXPANSION SERIAL PORT
TO DISPLAY
LOOP 1 LOOP 2 LOOP 3 LOOP 4
FIRE 1 TROUBLE FIRE 2 SUPERVISORY AUXILARY
NAC 1 NAC 2 NAC 3 NAC 4
FIRE ROUTING
TROUBLE ROUTING
PROGRAMMABLE OUTPUT
REMOTE CONTROL AND AUX. INPUT
1. TBL 2. RES 3. INT 4. CNT 5. SIL 0V 6. PR1 7. PR2 8. PR3
ADDITIONAL I/O BOARDS
COMMS
AUX 24V
NETWORK IN
NETWORK OUT
REMOTE PSU
BATTERY DISCONNECT
BATTERY LOW
AC POWER FAILURE
GROUND FAULT
CHARGER TROUBLE
24VDC
SUPERVISED POLARITY REVERSING OUTPUTS. 10K OHM END-OF-LINE RESISTORS (EOLR) P/N VF1544-00
ORIENT EOLD AS SHOWN
SUPERVISED POLARITY REVERSING OUTPUT. 1N4004S END-OF-LINE DIODE (EOLD) P/N VF1519-00.
USE DRY CONTACTS FOR DIGITAL INPUTS 1-8
RS485 SERIAL BUS COMMUNICATION
SUPERVISED AUXILIARY 24 VDC
eNET NETWORK COMMUNICATION
TERMINAL-STRIP X2
RIBBON POWER CABLE, VF1550-00
NOT USED
+ 24VDC
ALL CIRCUITS ARE POWER LIMITED EXCEPT AC AND BATTERY INPUTS.
4 AMP OEM1 POWER SUPPLY, 120 VAC AND 240 VAC, VF8115-00
CAUTION De-Energize Unit Prior To Servicing
9
eNET INTERFACE, VF1170-00
eNET COMMUNICATION PROVIDED AT THE NETWORK IN AND NETWORK OUT TERMINALS OF THE ELITE PANEL.
ENABLE FOR KEY SWITCH CONTROL
MODEM-DACT ETHERNET VF1153-00
DUAL TELEPHONE CABLE, VF1552-00
1 2 3 4 5 6 7 8
24VDC
TB6
EARTH GROUND (GREEN)
F2
TB4
TB3
LED STATUS INDICATORS
POSITIVE (RED)
NEGATIVE (BLACK)
JUMPER
BATTERY 1
BATTERY 2
KIT, VF1514-00 CONTAINS BATTERY LEADS, JUMPER AND FUSE ASSEMBLY VF1548-00. FUSE ASSEMBLY VF1548-00 CONTAINS 32 V @10 A FUSE WITH RED CABLING.
AC NORM D35
EARTH FAULT D2
GENTBL CRGFLT D3
BAT LOW D30
BAT DISCON D10
HEART BEAT D9
DC OUTON D31

TELCO CONNECTIONS ARE SUPERVISED AS WELL AS DATA AND POWER CONNECTIONS.

THE NO COMMUNICATION MODEL OF THE ELITE PANEL DOES NOT INCLUDE THE MODEM-DACT AND THE TELCO COMMUNICATION FEATURES SHOWN.

BATTERIES 1 AND 2 ARE SEALED-RECHARGEABLE AND SUPERVISED.
THE 4 AMP POWER SUPPLY CAN CHARGE BATTERIES TO A 50 AH MAXIMUM. CONNECT BATTERIES IN SERIES. JUMPER BATTERIES AS SHOWN. DO NOT CONNECT BATTERIES IN PARALLEL.

BATTERY CAPACITY IS LOAD DEPENDANT AND MUST MEET OR EXCEED STANDBY CURRENT.

INSPECT BATTERIES ANNUALLY AND REPLACE EVERY 3 TO 5 YEARS.
REPLACE STANDBY-BATTERIES WITH SEALED-LEAD-ACID TYPES THAT ARE UL RECOGNIZED.

VES FIRE DETECTION SYSTEMS

LABEL PART NUMBER: VF3518-00, REVISION E01.05
DATE: 10/19/2009

This page intentionally left blank.

OPERATING INSTRUCTIONS

OPERATING INSTRUCTIONS FOR ALL MODELS OF THE eLAN, eLAN LITE AND ELITE PANEL

PATENT PENDING

LED INDICATORS

LEFT LED INDICATORS

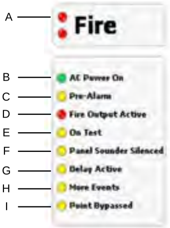

Key	LED	Color	LED Lit
A	Fire (2)	Red	An alarm or fire drill condition exists. The status condition is provided on the LCD display. The e-LAN buzzer sounds intermittently. Output relays are activated. • Flashing = NACs Activated • On Continuous= NACs silenced • OFF = Panel and NACs Reset
B	AC Power On	Green	AC power is on.
C	Pre-Alarm	Yellow	A pre-alarm condition exists. Pre-alarm status is provided on the LCD display. The e-LAN buzzer sounds continuously.
D	Fire Output Active	Red	An open or short condition exists at the Fire Routing connection located at X2 terminals 1 and 2.
E	On Test	Yellow	A test is in progress
F	Panel Sounder Silenced	Yellow	The Panel Sounder Silence button was depressed. NAC outputs are not affected.
G	Delay Active	Yellow	Warning sounders have been delayed during a fire condition. Press the Alarm Silence button to mute or extend the delay to a second stage delay.
H	More Events	Yellow	A non-fire alarm event exists. The e-LAN buzzer sounds continuously.
I	Point Bypassed	Yellow	LCD menu options have been used to disable devices.

RIGHT LED INDICATORS

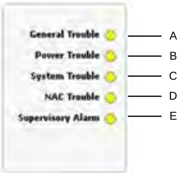

Key	LED	Color	Description
A	General Trouble	Yellow	A General Trouble condition exists when flashing. The General Trouble condition is identified by other lit LEDs. Status is provided on the LCD display. The e-LAN buzzer sounds continuously.
B	Power Trouble	Yellow	A Power Trouble exists. Status is provided on the LCD display. The e-LAN buzzer sounds continuously.
C	System Trouble	Yellow	A system device or circuit is faulty or is disabled. Press the Panel Sounder Silence button to silence the e-LAN buzzer.
D	NAC Trouble	Yellow	A NAC Trouble exists at X1 terminals 32 through 39. Connections at this location are faulty or disabled.
E	Supervisory Alarm	Yellow	Status is provided on the LCD display. The e-LAN buzzer sounds continuously.

LABEL PART NUMBER: VF1693-00, REVISION E04.02
DATE: 12/10/08

CONTROLS

UPPER CONTROLS

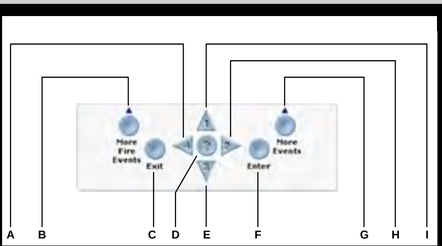

Key	Name	Description	Operation
A	4	Navigates menu selections left.	Press 4 to navigate menu selections left.
B	More Fire Events	Displays the number of alarms present and overrides the display provided by menu navigation. Provides event status for fires.	1 Press the More Fire Events button. 2 Read event on LCD. 3 Press 3 to scroll through events. 4 Press 2 to display event. 5 Press 3 to scroll through events.
C	Exit	Cancels the current menu selection and returns to the main menu.	Press Exit to cancel the current menu selection and return to the main menu.
D	?	Provides a "help screen" for the current menu display and also displays status.	Press ? to provide status for the existing LCD display.
E	3	Navigates menu selections down.	Press 3 navigate menu selections down.
F	Enter	Enables the menu selection.	Press Enter to enable the menu selection.
G	More Events	Displays the number of events and overrides menu navigation. Provides event status for non-fire alarm events.	1 Press the More Events button. 2 Read event on LCD. 3 Press 3 to scroll through events. 4 Press 2 to display event. 5 Press 3 to scroll through events.
H	2	Navigates menu selections right.	Press 2 to navigate menu selections right.
I	1	Navigates menu selections up.	Press 1 to navigate menu selections up.

REFERENCE MATERIAL

INSTALL MODELS OF THE eLAN OR ELITE PANEL OPERATING ON THE VESNet IN ACCORDANCE WITH THE FOLLOWING DOCUMENTS:

- eLAN H INSTALLATION MANUAL, VF1615-00, REV. E05.XX
- eLAN A INSTALLATION MANUAL, VF1635-00, REV. E02.XX
- ELITE H INSTALLATION MANUAL, VF3515-00, REV. E02.XX
- ELITE A INSTALLATION MANUAL, VF3514-00, REV. E02.XX
- eLAN LITE INSTALLATION MANUAL, VF1634-00, REV. E05.XX
- eLAN LITE INSTALLATION MANUAL, VF1614-00, REV. E02.XX

INSTRUCTION PLACEMENT

FRAME THESE INSTRUCTIONS AND PLACE THEM ADJACENT TO THE CONTROL UNIT FOR READY REFERENCE.

IN THE EVENT OF TROUBLE

CONTACT:	
NAME:	
ADDRESS:	
CITY:	
STATE:	
ZIP:	
TELEPHONE:	

LOWER CONTROLS

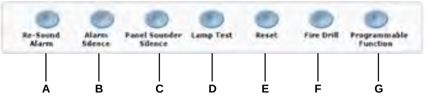

Key	Name	Description	Operation
A	Re-Sound Alarm	Re-sounds e-LAN alarm after the condition is silenced by the Panel Sounder Silence button. Re-sounds NAC alarms silenced by the Alarm Silence button.	1 Press 3 to display "SET ACCESS LEVEL 2 MENU". 2 Provide Access Level 2 authorization. 3 Press Enter 4 Press the Re-Sound Alarm button.
B	Alarm Silence	Silences NACs. Also silences the e-LAN buzzer during the Fire Drill test, troubles and alarms.	1 Press 3 to display "SET ACCESS LEVEL 2 MENU". 2 Provide Access Level 2 authorization. 3 Press Enter 4 Press the Alarm Silence button.
C	Panel Sounder Silence	Mutes the e-LAN buzzer only.	Press the Panel Sounder Silence button.
D	Lamp Test	Tests the e-LAN LEDs, the LCD and the internal buzzer.	Press the Lamp Test button to illuminate all LEDs, darken the front-panel display and sound the e-LAN buzzer.
E	Reset	Resets latching inputs such as fire and pre-alarm events.	1 Press 3 to display "SET ACCESS LEVEL 2 MENU". 2 Provide Access Level 2 authorization. 3 Press Enter 4 Press the Reset button.
F	Fire Drill	Provides a panel Fire Drill. The Fire Drill button can also be configured to perform other functions.	1 Press 3 to display "SET ACCESS LEVEL 2 MENU". 2 Provide Access Level 2 authorization. 3 Press Enter. 4 Press the Fire Drill button. To stop the fire drill: 1 Press 4 to display the "SET ACCESS LEVEL 2 MENU". 2 Provide Access Level 2 authorization. 3 Press Reset or Fire Drill.
G	Program-mable Function	The Programmable Function button can be configured to perform other functions.	Requires ACCESS LEVEL 3 to configure the button.

OPERATING CHARACTERISTICS

NORMAL-STANDBY

THE FOLLOWING FORMAT APPEARS ON THE FRONT-PANEL-DISPLAY WHEN OPERATING WITHOUT TROUBLES OR ALARMS:

```
TIME, DAY, DATE
DEFAULT OR USER DEFINED MESSAGE

USE ARROW KEYS TO ENABLE PANEL
PRESS ? FOR HELP
```

TROUBLE-SILENCE

THE FOLLOWING CONDITIONS OCCUR AFTER PRESSING THE "PANEL SOUNDER SILENCE" BUTTON TO SILENCE A TROUBLE:

- THE GENERAL TROUBLE LED FLASHES YELLOW.
- THE POWER TROUBLE LED FLASHES YELLOW.
- THE INTERNAL SOUNDER DOES NOT ANNUNCIATE THE LCD DISPLAY PROVIDES A MESSAGE TO IDENTIFY THE TROUBLE CONDITION.

MAINTENANCE AND REPAIR

STANDBY-BATTERY MAINTENANCE

STANDBY BATTERIES ARE SEALED-RECHARGEABLE AND PROVIDE FACP RECOVERY IN THE EVENT OF POWER FAILURE. INSPECT STANDBY BATTERIES AND CONNECTIONS ANNUALLY. REPLACE STANDBY BATTERIES EVERY 3 TO 5 YEARS. CONNECT STANDBY BATTERIES IN SERIES. DO NOT CONNECT STANDBY BATTERIES IN PARALLEL.

REPLACING THE 3 AMP POWER-SUPPLY FUSE

TO REMOVE THE FUSE:	
1	TURN OFF 120 VAC POWER TO THE 4 AMP OEM1 POWER SUPPLY
2	LOCATE THE HOUSING CONTAINING THE 3 AMP FUSE
3	GENTLY INSERT A SMALL-FLAT-BLADE SCREWDRIVER INTO THE SLOT OF THE FUSE-HOUSING
4	SLIDE THE LENGTH OF THE SCREWDRIVER INTO THE SLOT OF THE FUSE-HOUSING UNTIL THE UPPER-HALF DISLODGES FROM THE LOWER-HALF OF THE HOUSING
5	REMOVE THE FUSE FROM THE UPPER-HALF OF THE FUSE-HOUSING
TO INSTALL THE NEW FUSE:	
1	INSERT THE FUSE IN THE UPPER-HOUSING
2	CENTER THE POSITION OF THE FUSE IN THE UPPER-HOUSING
3	PRESS THE UPPER-HOUSING ON THE LOWER-HOUSING UNTIL THE HALVES SNAP TOGETHER
4	RESTORE 120 VAC POWER TO THE 4 AMP OEM1 POWER SUPPLY
5	CHECK LED STATUS INDICATORS TO CONFIRM THAT THE 4 AMP OEM1 POWER SUPPLY IS OPERATING CORRECTLY. CONFIRM THAT HEART BEAT IS FLASHING, DC OUTON IS LIT CONTINOUSLY AND AC NORM IS LIT CONTINUOUSLY.

REPLACING THE 10 AMP BATTERY FUSE

TO REMOVE THE FUSE:	
1	DISCONNECT THE JUMPER-CABLE CONNECTION BETWEEN BATTERY 1 AND BATTERY 2
2	DISCONNECT THE RED-CABLE FROM THE POSITIVE TERMINAL OF THE TB3 BATTERY CONNECTOR
3	DISCONNECT THE BLACK-CABLE FROM THE NEGATIVE TERMINAL OF THE TB3 BATTERY CONNECTOR
4	DISPOSE OF THE CABLES DESCRIBED IN STEPS 1 THROUGH 3 ABOVE.
5	REMOVE EXISTING BATTERY 1 AND BATTERY 2 FROM THE BOTTOM OF THE eLAN PANEL CABINET AND RE-CYCLE THEM ACCORDING TO MANUFACTURER GUIDELINES.
TO INSTALL THE NEW FUSE:	
1	MOUNT THE NEW STANDBY-BATTERIES IN THE BASE OF THE eLAN PANEL CABINET
2	CONNECT THE JUMPER-CABLE FROM THE NEGATIVE TERMINAL OF BATTERY 1 TO THE POSITIVE TERMINAL OF BATTERY 2.
3	CONNECT THE BLACK-CABLE FROM THE NEGATIVE TERMINAL OF BATTERY 2 TO THE NEGATIVE TERMINAL (TB3 BATTERY) OF THE 4 AMP OEM1 POWER SUPPLY.
4	CONNECT THE RED-CABLE FROM THE POSITIVE TERMNAL OF BATTERY 1 TO THE POSITIVE TERMINAL (TB3 BATTERY) OF THE 4 AMP OEM1 POWER SUPPLY.
5	DETERMINE THAT TROUBLE CONDITIONS ARE NOT REPORTED BY THE eLAN PANEL FOLLOWING THE FUSE REPLACEMENT TO CONFIRM THAT THE INSTALLATION WAS PERFORMED CORRECTLY

This page intentionally left blank.

Glossary

Term	Definition
4 Amp OEM 1 Amp Power Supply	The 4 Amp OEM 1 Amp Power Supply is contained in all Elite Panels and provides a 112 Watt (4 Amp) off-line switch-mode power-source and battery charger. Features include regulated 24VDC supply, battery disconnect, battery low, mains fail, earth fault and charger fault.
Control Unit Board	The Control Unit Board is contained in all Elite Panels and provides 2 Loop connections for initiating devices and notification appliances.
Data Cable	The Data Cable connects the Panel Annunciator Board to the Modem-DACT Ethernet, Media Gateway and NIC.
Ethernet	The Ethernet provides the configuration path to the Media Gateway.
Heartbeat	The Heartbeat is the status LED provided on the Modem-DACT Ethernet, Media Gateway, NIC and 4 Amp OEM 1 Amp Power Supply. The Heartbeat identifies the booting and operating health of these devices.
Modem-DACT Ethernet	The Modem-DACT Ethernet provides TELCO reporting features to the Elite Panel.
Media Gateway	The Media Gateway provides TELCO reporting features to the Elite Panel and VESNet communication to Network Interface Cards (NICs). It also provides an Ethernet connection for receiving configurations through the internet.
NIC	The Network Interface Card (NIC) provides reports to the Media Gateway through the VESNet.
Panel Annunciator Board	The Panel Annunciator Board is contained in all Elite Panels and provides a serial-data-interface to the Modem-DACT Ethernet and Media Gateway. The Panel Annunciator Board also provides LCD and key pad functions to the Elite Panel.
Polarized	Polarized describes the direction of current flow in the supervision diode of the Programmable Output. *Reference Section 3, “Connecting Output Devices”.*
Self-Test-Diagnostics	Self-Test-Diagnostics is an LED lighting sequence used on the Modem-DACT Ethernet, Media-Gateway, NIC and 4 Amp OEM 1 Amp Power Supply to indicate the health of the booting process.
Suppression	Suppression describes the effect that the shunt and series diode have on the back EMF surge of the solenoid-valve. *Reference Section 3, “Connecting Output Devices”.*
Supervision	Supervision describes the monitoring function that the shunt diode performs when connected across the Programmable Output. *Reference Section 3, “Connecting Output Devices”.*
Transparent Input	A transparent input has no effect on the Elite Panel.

This page intentionally left blank.

Index

Numerics

4 Amp OEM1 Power Supply 14

A

AC NORM 15, 43
Access Level 2 54
Access Level 3 60
Access Level 3 controls 54
Activates inputs, outputs or actions 10
additional requirements 22
Address restrictions 6
addressable device 22
Addressable notification appliances 25
Alarm Silence 10
Alarm Silence button 10
analog-sounder-bases 6
anchor the empty cabinet 36
anchoring the Elite 36
Audible Devices 26
Authorized Special Application Devices 94
Automatic-retry 14
Aux 24V 27
Auxiliary 29, 30
Auxiliary 24 DC 28
Auxiliary 24 VDC 28, 104
auxiliary 24 VDC power source 12

B

BAT DISCON 15, 43
BAT LOW 15, 43
batteries 34
Battery Cabinet 21
battery disconnected 41
Battery-backup 14
Battery-boost 14
battery-lead-kit 64
before beginning the installation process 16

C

cabinet door 37
cabinet door or enclosure-box 68
cancel disablements 57
Cancels the current menu selection 9
Central keypad number four 9
Central keypad number one 9
Central keypad number three 9
Central keypad number two 9
Central keypad question mark 9
circuit overloads 64
Class A Style 7 connection 21
Class A, Style 6 22
Class A, Style 6 compliance 23
Class B connections 24
Class B, Style Y Notification Appliances 26
clearance beyond the door 31
Clearing the Event Log 49
Closed Nipple 22
Closed Nipple devices 22, 23
closed-nippling 22
Common 30
common enclosure 22
Compatible Devices for Auxiliary 24V 94
Compatible Notification Appliance Circuits 80
Configures the Elite Panel 39
Confirming a Successful Installation 39
Connect Class A loops 21
Connect Class B loops 24
Connecting 21, 26
Connecting 24VDC Devices 20
Connecting Batteries 21
Connecting Class A Loops 21
Connecting NAC Devices 26
Connecting Remote Control And Aux. Inputs 30
connecting the batteries 34
Contact ID format 6
Contacting VES for Repair 4
contamination status 59
Control Unit Board 12, 17, 70
controls and indicators 8
copper cabling 27, 28
Current Draw Worksheet 96

D

DC OUTON 15, 43
Denotes a displayed variable 4
Details of the fire activation 59
Detector Sensitivity 25
Detector Spacing 24
device-loading 96
digital communication format 6
Disable 55
Disable Addresses 55
Disable Loops 55
Disable Panel I/O 56
Disable Zones 55
Disablements Menu 55
Disables or enables FIRE ROUTING 57
Disables or enables NAC 1 56
Disables or enables NAC 2 56
Disables or enables PROG OUTPUT 57
Disables or enables the front panel Programmable Function button 56
Disables or enables the front-panel Fire Drill button 56
Disables or enables TROUBLE ROUTING 57
disconnected-battery and low-battery indicators 62
Displaying the Event Log 47
Displays after a successful boot 39
Displays the number of alarms present 9
Displays the number of events present 9
Document Conventions 4
door clearance requirement 31
Dressing Cables 38

E

EARTH FAULT 15, 43
electrostatic discharge 17
electrostatic discharge damage 17
Emergency 30
Enables the menu selection 9
Enter 9
EVENT LOG 44
Event Log 47
event log 44
event log clear 44
Events and Status 59
Exit 9
expansion boards 28

F

FACP Supervision 14
fault conditions 43
field-programmable software 1
Fire 1 29
Fire 2 29
Fire Drill 10, 56
Fire Event 59
Fire Protection Service Valves 28
FIRE ROUTING 57
Fire Routing 27
Fire Routing and Trouble Routing outputs 27
Fire warning NACs 59
Fire Zone indicator 59
front panel lamps 40
Front-Panel Menu 44
Access Level 3 59
Disablements 55
Events and Status 59
Sensor Maintenance Early Warning 59
Set System Time 58
Test Zones 58
front-panel-display 28
Fuse failure 64

G

General Trouble indicator 59
GENTBL CRGFLT 15, 43
Glossary
4 Amp OEM1 Power Supply 14
4 Amp Power Supply 110
Control Unit Board 110
Modem DACT Ethernet 110
Panel Annunciator Board 110
ground cable connection 37
ground lug 35, 37
ground strap 18
Ground straps 17

H

HEART BEAT 15, 43
heart-beat 62
help screen 9
hole marking requirements 31

I

if front panel lamps do not light 40
If You Need Help
technical assistance contact 4
In the event of a fire 61
Indicates text displayed on a computer screen 4
Indicates text that you must type 4
industry-standard receivers 6
Initiate zone testing 58
Input Delay Settings 24
Inspecting Batteries 62
Installation
Anchoring the Elite 36
Before you begin 16
Confirming a Successful Installation 39
Connecting Class B Loops .24
Connecting NAC Devices 26
Connecting the Power Supply and Batteries 19
Event Log 47
Loop Data Test 51
Mounting the Elite 31, 98
NFPA 72, Style 6 24
NFPA 72, Style 7 22
Output Devices 27
Programmable Output 28
TEST ZONES 44
Testing the Panel Lamps 40
Troubleshooting 42
Wiring AC Power and TELCO 36
Installation Procedures 20
installing audible and visual Notification Appliances . .26
Installing SLC Devices 24
Installing the 10 Amp Battery-Fuse 64
Installing the 3 Amp Power Supply Fuse 66
Installing the Standby-Batteries 63
internal-component-wiring 67
Introduction 1, 110

J

Jack J1 12
Jack J2 12

K

knockout tabs 36

L

Lamp Test 10
lamp test button 40
LCD status display 59
left panel and right panel indicators 11
left panel indicators 11
Local NAC On – Off 58
Logon 16, 54
LOOP DATA TEST 44
Loop Devices and Accessories 77
Loop Initialization 39
Loop Outputs On – Off 58
Low battery voltage 41
low current auxiliary devices 28
low-battery indicator 62
lower control pad 10

M

maintain and repair 62
Maintenance 62
Marking 31
Marking the Location 31
maximum current draw 102
maximum line loss 27, 28
maximum Pre-Alarm event delay 59
maximum resistance 103
maximum Trouble event delay 59
maximum wire length 102
Media Gateway Installation Manual 3
minimum operating-voltage 102
Modem DACT Ethernet 17
monitoring and reporting 6
More Events 9
More Fire Events 9
Mounting Hardware 18
mounting site 16
Mutes the internal buzzer 10

N

NAC Circuit 1 56
NAC Circuit 2 56
NAC Trouble indicator 55
navigate down to TEST ZONES 45
Navigate the menu 54
Navigates menu selections down 9
Navigates menu selections to the left 9
Navigates menu selections to the right 9
Navigates menu selections up 9
Network Interface Card (NIC) Installation Manual 3

NFPA 72, Class A, Style 7 requirements 22
nippling 23
No Communication” model 17
non-latching inputs 10
Non-latching inputs are cleared 10
Normal Standby 40
normally-open contact 29
Normal-Standby 39, 40
“No Communication” model 33
Notification Appliance (NA) 26
Notification Appliance Circuits 12

O

Operating Environment 74
Output Circuits 12
Overview 6
Device Connections 12
Indicators 11
Panel Controls and Indicators 8

P

Panel Annunciator Board 12, 17
panel buzzer 59
Panel Initialization 39
Panel Outputs On – Off 58
Panel Sounder Silence 10
Part Numbers 4
Appendix B 4
Part numbers
Appendix B 4
Appendix D 4
Physical Specifications 75
Planning 16
Points and addresses 6
points per loop 6
polarized and suppressed circuits 27, 28
power cable 34
power cable connections 33
Power-Supply 14
power-supply fuse 64
Pre-alarm Event 59
Preparation 16, 54
Preparing 32
Preparing for Mounting 32
PROG OUTPUT 57
Programmable 56
Programmable Function 10
Programmable Input 1 30
Programmable Input 2 30
Programmable Input 3 30
Programmable Output 27, 28
protect SLC loop devices 22
Provides a fire drill test 10

Q

qualified personnel 17

R

raceways 22
Re Sound Alarm 10
Related Documentation 3
Relay Contacts 29
Relay contacts 29
removes the event log 49
Removing Battery Cables 34, 35
Removing Cable Connections 33
Removing Knockout Tabs 36
Removing Power and serial-cables 33
Removing the 10 Amp Battery-Fuse 64
Removing the 3 Amp Power Supply Fuse 65
Removing the Back-Plate 36
removing the batteries 35
removing the cable connections 33
Removing the Cables 32
Removing the Door 32
removing the door 32
Removing the Ground-Wire 35
Removing the Power-Cable 34
Removing the Standby-Batteries 62
replacement batteries 62
Replacement Parts 78
replacement standby-batteries 63
Replacing Cabinet Components 68
Replacing Fuses 64
Replacing Internal Components 67
Replacing Standby-Batteries 62
Reset 10, 30
Reset button 10
Resets latching inputs 10
Ribbon Power Cable 18
right panel indicators 11

S

Securing the ground wire connection 37
Selecting Standby-Batteries 18
self-resetting fuse 28
Sensor Maintenance Early Warning 59
sets the panel date and time 58
Short Circuit Isolator Modules 22
Short-circuit protection 14
SIA or Contact ID 6
Side Terminal Ratings 72
Signaling Line Circuits 12
Silence 30
Silence the sounder 42
Silences NACs connected to the Elite 10
silencing operation 41
single housings 22
SLC detectors 24
SLC loop 22
SLC loop installation 25
Specifying Wire Size 20
Standard for Control Units and Accessories for Fire Alarm Systems 1
Status 14
status monitoring and reporting 6
Sub-addresses 55
sum of device-loads 96
Supervisory 29

T

TELCO 17
TELCO reporting features 17
Terminal Strip X1 12
Terminal strip X1 13
Terminal Strip X2 12
Terminal strip X2 13
Terminate unused Loops 24
termination jumpers 21, 24
test example 53
Test Mode condition 58
TEST ZONES 44
Testing the Installation 38
Tests devices connected to Elite 44
Tests Elite Panel NACs 44
Tests Elite Panel outputs other than NACs 44
Tests front panel indicators and the internal buzzer . 10
Tests internal hardware and firmware 39
Tests loop driven outputs 44
Timed disabling 56
To cancel disablements 57
To complete the installation 16
to comply with NFPA 72, Class A, Style 6 or Style 7 . 22
toggle disablements 57
Top Terminal Ratings 70
Total Load-Current 31
total-current 96
Trouble 29, 30
trouble condition 41
Trouble Event 59
TROUBLE ROUTING 57
Trouble Routing 27
trouble signal 21, 24
Troubleshoot the 4 Amp OEM1 Power Supply 43
Troubleshooting 43
troubleshooting system problems 47
Trouble-Silence 41
Trouble-Silence Test 41
twin red FIRE lamps 59
two loop addressable monitoring 17

U

unsupervised inputs 30
upper control pad 44
upper panel and lower control pads 9
upper-control-pad 9
used for emphasis 4
Using This Manual 3

V

variable that you must type 4
View & Restore Disabled Features 57
View / Restore Disablements option 57
View Devices 57
Visual Devices 26
voltage reversing outputs 27, 28

W

Writing styles 4

Z

zero-ohm shorting-jumpers 21, 24

This page intentionally left blank.

Elite Panel Installation Manual
A-Series

VF3514-00, Revision E02.06